CHANGSHU TONGRUN AUTO ACCESSORY CO.,LTD

Torin BIG RED JACKS

GARAGE EQUIPMENTS

(CHANGSHU, CHINA) **CHANGSHU TONGRUN AUTO ACCESSORY CO.,LTD**

(NANTONG, CHINA) **NANTONG TONGRUN AUTO ACCESSORY CO.,LTD**

(ANHUI, CHINA) **ANHUI TONGRUN AUTO ACCESSORY CO.,LTD**

(CHANGSHU, CHINA) **CHANGSHU TONGRUN AUTO REPAIR EQUIPMENT CO.,LTD**

(CHANGSHU, CHINA) **CHANGSHU TONGRUN LIFTING EQUIPMENT CO.,LTD**

(CHENGDE, CHINA) **CHENGDE TONGRUN AUTO ACCESSORY CO.,LTD**

(Ontario, CA.91761 USA) **TORIN INC**

Founded in 1954 Torin produces quality automotive products for service professionals. As a manufacturer, a marketer and a developer of automotive maintenance equipment and automotive products Torin strives to provide our customers with the highest level of customer service and quality products. For many years we have been considered by people throughout the garage industry as being the premier lifting equipment and toolbox manufacturer.
Our brand "BIGRED" "BLACKJACK" "TCE" brings the professional market the same pride, dependability and professional market the same pride, dependability and service, automotive professionals have trusted for the last 50 years."
ISO Certified ISO14001:2004, ISO9001:2000, ISO/TS16949:2009

Torin BIG RED JACKS

Index

Jacks + Hydraulics

Bottle Jack (1-9)
Air Bottle Jack (10-11)
Screw Jack (12) **1-12**

Trolley Jack (12-16)
Garage Jack (17-23)
Rubber Jack-Pad (24)
Nylon Wheel (25)
Low Profile Garage Jadk (26-27) **13-27**

Aluminum Jack (28-29)
Long Floor Jack (30)
Pneumatic Jack (31-34) **28-34**

Portable Power (34-35)
Hydraulic Ram (36)
Hydraulic Hand Pump (37)
Air Hydraulic Foot Pump (38) **34-38**

Scissor Jack (39)
Industrial Toe Jack (40) **39-40**

Off-Road Jack (41)
Air Jack (42)
Wheel Chocks (43) **41-43**

Jack Stand (44-46)
Heavy-Duty Jack Stand (47)
Vehicle Support Stand (48)
High Position Jack Stand (49) **44-50**

Engine Stand (51)
Engine Leveler (52)
Long Ram Jack (52)
Engine Crane (53-54)
Engine Support (55) **51-55**

Shop Press (56-67)
Transmission Jack (68-71) **56-71**

Car Lifts + Tyre Machines

Two Post Lift (72-79)
Four Post Lift (80-81)
Scissor Lift & Truck Lift (82-86) **72-86**

Tyre Changer (87-92)
Wheel Balancer (93-96)
Wheel Alignment (97) **87-97**

Tire Repair (98-103)
Brake Lathe (104) **98-104**

Garage Equipments + Accessories

Curing Lamp & Car Dolly (105-107)
Pallet Jack (108-109)
Tire Dolly & Changer (110)
Dual Wheel Dolly (111-118) **105-118**

Drum Transporter & Frame Straightener (119-121)
Pipe Bender & Auto Painting Rack (122-125)
Shortwave Infrared Curing lamp(126)
Engine Support (127-132) **119-132**

Air Compressor (133-134)
Air Tools(135-141)
Air Hose Reel(142-143)
Parts Washer & Portable Sandblaster & Sandblast Cabinet (144-147) **133-147**

Oil Drains & Oil Lubricator (149-151)
Grease Gun & Jerrivan (152-156)
Pressure Washer & LED Work Light (157-160) **148-160**

Car Creeper (161-162)
Car Seat (163-166) **161-166**

Cable Puller & Winch (167-170)
Chain Block (170-173) **167-173**

Bike Rack (174)
Air Compressor & Paper Stand (175) **174-175**

Tire Rack & Goat Hanger **176**

Car Ramp **177-178**

Tyre Wrench(179-180)
Bench Vise (181) **179-181**

Auto Tools

Hydraulic Puller (182)
Engine Tools (183-187) **182-187**

General And Other Tools **188-194**

Motorcycle Equipment

Motor Lifting Jack **195**

Motor Lifting Table **196-199**

Motor Support Stand **200-201**

Welded Bottle Jacks

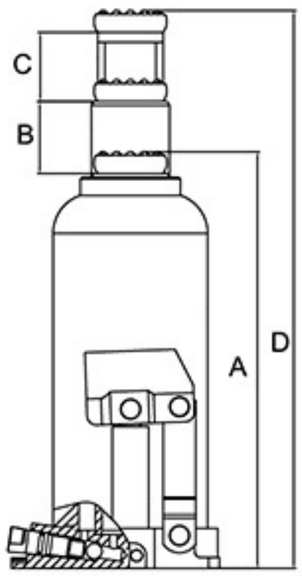

- Steel plate instead of cast iron for environment protection
- Preventing from oil leakage
- Oil remaining clear after using

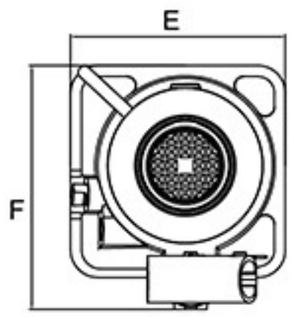

Complies with ASME Safety Standards

TH90204X
2 Ton

TH90304X
3 Ton

TH90404X
4 Ton

TH90504X
5 Ton

TH90604X
6 Ton

TH90804X
8 Ton

TH91004X
10 Ton

TH91204X
12 Ton

TH91504X
15 Ton

TH91604X
16 Ton

TH92004X
20 Ton

TH93204
32 Ton

TH95004
50 Ton

TH90204X
TH90304X
TH90404X
TH90504X
TH90604X
TH91204X
(In BMC)

Blow Mold Case C

Color Box B

Model	Fct.No.	Capacity	Min.Height (mm)	Lift Height (mm)	Adjustable Height(mm)	N.W. / G.W. (kg)	Package Size (mm)	QTY/CTN (pcs)	QTY/20'CY (pcs)	A	B	C	D	ExF
										(mm)				
TH90204X	TH90204X	2Ton	178	112	48	B 2.08 / 2.18	340x235x210	6	8790	178	112	48	338	94.5x78
						C 2.08 / 2.44	520x230x280		5280					
TH90304X	TH90304X	3Ton	188	115	60	B 2.82 / 2.97	375x265x225	6	6510	188	115	60	363	108.5x87
						C 2.82 / 3.24	570x230x310		4200					
TH90404X	TH90404X	4Ton	188	115	60	B 2.82 / 2.97	375x265x225	6	6510	188	115	60	363	108.5x87
						C 2.82 / 3.24	570x230x310		4200					
TH90504X	TH90504X	5Ton	207	125	70	B 3.72 / 3.92	280x265x255	4	4920	207	125	70	402	117x97
						C 3.72 / 4.32	355x255x290		4496					
TH90604X	TH90604X	6Ton	207	125	70	B 3.72 / 3.92	280x265x255	4	4920	207	125	70	402	117x97
						C 3.72 / 4.32	355x255x290		4496					
TH90804X	TH90804X	8Ton	222	145	80	B 4.7 / 4.84	295x275x260	4	4028	222	145	80	447	124x106
TH91004X	TH91004X	10Ton	222	145	80	B 4.7 / 4.84	295x275x260	4	4028	222	145	80	447	124x106
TH91204X	TH91204X	12Ton	227	150	80	B 6 / 6.12	415x165x265	3	3171	227	150	80	457	134.5x115
						C 6 / 6.84	410x200x310		2829					
TH91504X	TH91504X	15Ton	227	150	80	B 6.94 / 7.07	300x180x270	2	2762	227	150	80	457	141x118
TH91604X	TH91604X	16Ton	227	150	80	B 6.94 / 7.07	300x180x270	2	2762	227	150	80	457	141x118
TH92004X	TH92004X	20Ton	235	150	60	B 8.78 / 8.98	315x185x275	2	2178	235	150	60	445	152x124
TH93204	TH93204	32Ton	260	160	/	B 17.8 / 18.05	220x200x300	1	1086	260	160	/	420	185x165
TH95004	TH95004	50Ton	280	170	/	B 25.8 / 26.05	240x220x315	1	757	280	170	/	450	207x185

Welded Bottle Jacks

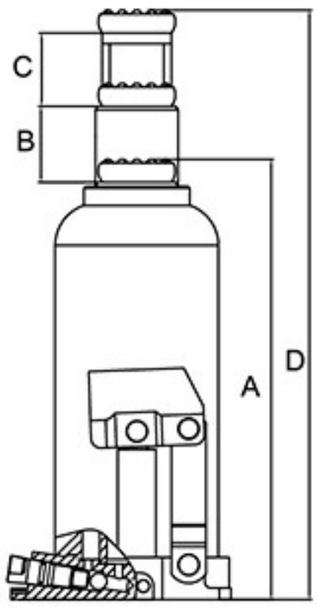

- Steel plate instead of cast iron for environment protection
- Preventing from oil leakage
- Oil remaining clear after using

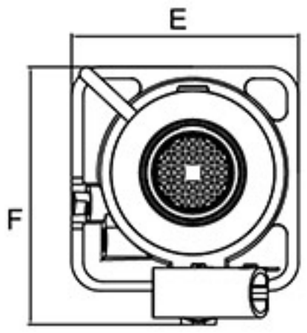

TH90204
2 Ton

TH90304 TH90404
3 Ton 4 Ton

TH90504 TH90604
5 Ton 6 Ton

TH90804 TH91004
8 Ton 10 Ton

TH91204
12 Ton

TH91504 TH91604
15 Ton 16 Ton

TH92004
20 Ton

TH93204
32 Ton

TH95004
50 Ton

TH90204
TH90304
TH90404
TH90504
TH90604
TH91204
(With BMC)

Blow Mold Case C

Color Box B

Model	Fct.No.	Capacity	Min.Height (mm)	Lift Height (mm)	Adjustable Height(mm)	N.W. / G.W. (kg)	Package Size (mm)	QTY/CTN (pcs)	QTY/20'CY (pcs)	A	B	C	D	ExF
										(mm)				
TH90204	TH90204X-GS	2Ton	168	100	48	B 2 / 2.11	340x235x205	6	9228	168	108	48	316	94.5x78
						C 2 / 2.36	520x230x280		5280					
TH90304	TH90304X-GS	3Ton	188	115	60	B 2.8 / 2.97	375x265x225	6	6150	188	115	60	363	108.5x87
						C 2.8 / 3.22	570x230x310		4200					
TH90404	TH90404X-GS	4Ton	188	115	60	B 2.8 / 2.97	375x265x225	6	6510	185	115	60	363	108.5x87
						C 2.8 / 3.37	570x230x305		4200					
TH90504	TH90504X-GS	5Ton	207	125	70	B 3.7 / 3.92	280x265x255	4	4920	207	125	70	402	117x97
						C 3.7 / 3.92	355x255x290		4496					
TH90604	TH90604X-GS	6Ton	207	125	70	B 3.7 / 3.92	280x265x245	4	4920	207	125	70	402	117x97
						C 3.7 / 4.5	400x230x330		3816					
TH90804	TH90804X-GS	8Ton	222	145	80	B 4.8 / 4.94	295x275x260	4	3960	222	145	80	447	124x106
TH91004	TH91004X-GS	10Ton	222	145	80	B 4.8 / 4.94	295x275x260	4	3960	225	145	80	450	124x106
TH91204	TH91204X-GS	12Ton	227	150	80	B 6 / 6.18	415x165x265	3	3156	230	150	80	460	134.5x115
						C 6 / 6.84	410x200x310		2829					
TH91504	TH91504X-GS	15Ton	227	150	80	B 7 / 7.13	300x180x270	2	2738	230	150	80	460	141x118
TH91604	TH91604X-GS	16Ton	227	150	80	B 7 / 7.13	305x180x270	2	2738	230	150	80	460	141x118
TH92004	TH92004X-GS	20Ton	235	150	60	B 8.6 / 9	315x185x275	2	2172	240	150	60	450	160x140
TH93204	TH93204	32Ton	260	160	/	B 17.8 / 18.05	220x200x300	1	1086	260	160	/	420	185x165
TH95004	TH95004	50Ton	280	170	/	B 25.8 / 26.05	240x220x315	1	757	280	170	/	450	207x185

Welded Bottle Jacks

NEW PRODUCT

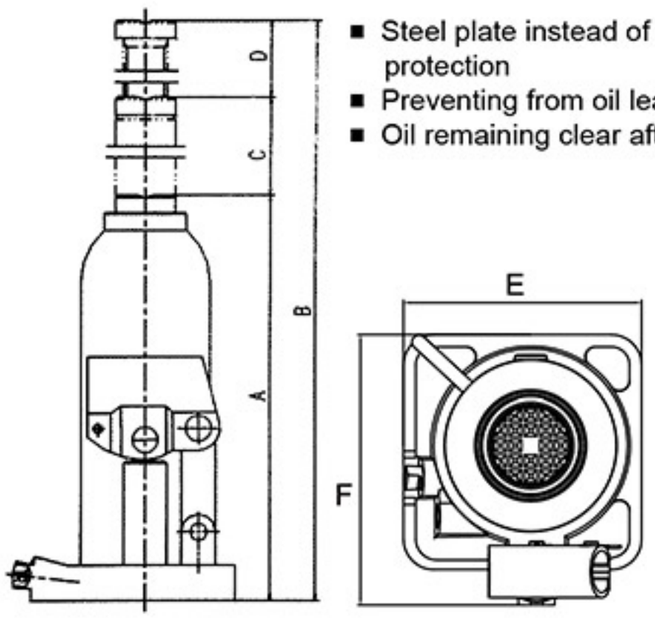

- Steel plate instead of cast iron for environment protection
- Preventing from oil leakage
- Oil remaining clear after using

Complies with ASME Safety Standards

TCH90204D
2 Ton

TCH90304D
3 Ton

TCH90404D
4 Ton

TCH90504D
5 Ton

TCH90604D
6 Ton

TCH90804D
8 Ton

TCH91004D TCH91204D
10 Ton 12 Ton

TCH91504D TCH91604D
15 Ton 16 Ton

TCH92004D
20 Ton

TCH93204D TCH95004D
32 Ton 50 Ton

Color Box

Model	Capacity	Min.Height (mm)	Lift Height (mm)	Adjustable Height(mm)	N.W. / G.W. (kg)	Package Size (mm)	QTY/CTN (pcs)	QTY/20'CY (pcs)	A	B	C	D	ExF
									(mm)				
TCH90204D	2Ton	150	80	48	2.29 / 2.38	325x225x175	6	7554	150	80	48	278	90x100
TCH90304D	3Ton	180	105	60	2.48 / 2.56	325x225x205	6	7062	180	105	60	345	90x100
TCH90404D	4Ton	180	110	60	3.10 / 3.29	355x245x205	6	5586	180	110	60	350	100x110
TCH90504D	5Ton	185	115	60	3.17 / 3.34	355x245x210	6	5508	185	115	60	360	100x110
TCH90604D	6Ton	185	115	60	4.08 / 4.29	245x265x210	4	4340	185	115	60	360	110x120
TCH90804D	8Ton	190	110	60	4.68 / 4.90	275x285x215	4	3820	190	110	60	360	120x125
TCH91004D	10Ton	190	110	60	5.16 / 5.35	285x290x215	4	3512	190	110	60	360	120x130
TCH91204D	12Ton	200	110	60	5.84 / 6.05	295x290x225	4	3120	200	120	60	380	120x135
TCH91504D	15Ton	205	125	60	7.03 / 7.30	290x165x230	2	2600	205	125	60	390	130x140
TCH91604D	16Ton	205	125	60	7.03 / 7.30	290x165x230	2	2600	205	125	60	390	130x140
TCH92004D	20Ton	220	140	60	8.05 / 8.28	325x165x245	2	2298	220	140	60	420	140x145
TCH93204D	32Ton	230	130	0	14.35 / 14.75	195x195x250	1	1304	230	130	0	360	160x175
TCH95004D	50Ton	230	130	0	19.22 / 19.40	210x225x250	1	994	230	130	0	360	175x205

Hydraulic Bottle Jacks

Complies with ASME Safety Standards

Low Profile

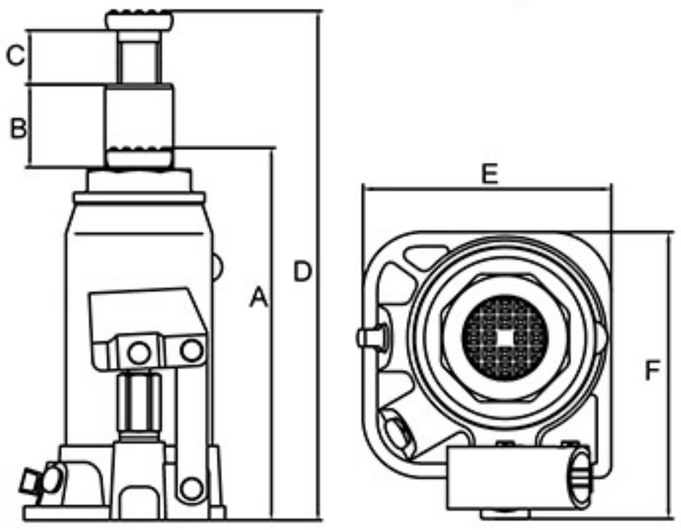

T90204DX
2 Ton

T90304DX T90404DX
3 Ton 4 Ton

T90504DX T90604DX
5 Ton 6 Ton

T90804DX
8 Ton

T91004DX
10 Ton

T91204DX
12 Ton

T91504DX T90164DX
15 Ton 16 Ton

T92004DX
20 Ton

T932011
32 Ton

T950011
50 Ton

T90604DX
T90404DX
T90204DX
T90304DX
T90504DX
(With BMC)

Blow Mold Case C

Color Box B

Model	Fct.No.	Capacity	Min.Height (mm)	Lift Height (mm)	Adjustable Height(mm)	N.W. / G.W. (kg)	Package Size (mm)	QTY/CTN (pcs)	QTY/20'CY (pcs)	A	B	C	D	ExF
										(mm)				
T90204DX	T90204D	2Ton	148	80	48	B 2.3 / 2.38	315x225x175	6	8106	148	80	48	276	88x92
						C 2.3 / 2.64	345x330x185		7356					
T90304DX	T90304D	3Ton	180	110	60	B 3.1 / 3.18	330x240x205	6	6120	180	110	60	350	92x100
						C 3.1 / 3.54	575x245x295		3826					
T90404DX	T90404D	4Ton	180	110	60	B 3.1 / 3.18	330x240x205	6	6120	180	110	60	350	92x100
T90504DX	T90504D	5Ton	185	110	60	B 3.95 / 4.1	260x235x220	4	4848	185	110	60	355	96x112
						C 3.95 / 4.39	485x255x200		4356					
T90604DX	T90604D	6Ton	185	110	60	B 3.95 / 4.1	260x235x205	4	4084	185	110	60	355	96x112
T90804DX	T90804D	8Ton	190	115	60	B 4.8 / 4.92	275x250x220	4	4848	190	115	60	365	103x118
T91004DX	T91004D	10Ton	195	120	60	B 5.61 / 5.72	280x260x225	4	3432	195	120	60	375	110x123
T91204DX	T91204D	12Ton	200	120	60	B 6.54 / 6.68	400x165x225	3	2970	200	120	60	380	116x134
T91504DX	T91504D	15Ton	205	125	60	B 7.6 / 7.7	315x170x235	2	2546	205	125	60	390	133x136
T91604DX	T91604D	16Ton	205	125	60	B 7.6 / 7.7	315x170x235	2	2546	205	125	60	390	133x136
T92004DX	T92004D	20Ton	217	130	60	B 9.75 / 9.92	330x180x250	2	1990	217	130	60	407	144x152
T932011	T93204DE	32Ton	230	130	/	B 15.9 / 16.2	230x150x255	1	1234	230	130	/	360	130x170
T950011	T95004DE	50Ton	240	130	/	B 25.4 / 25.7	270x195x255	1	778	240	130	/	270	168x210

Hydraulic Bottle Jacks

Blow Mold Case C Color Box B

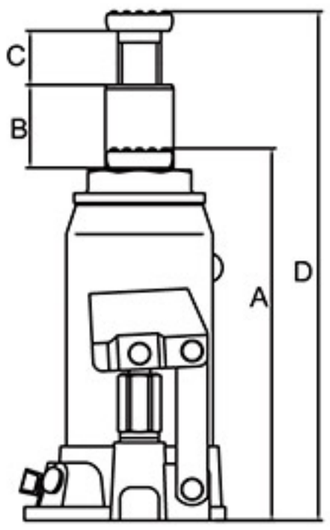

Low Profile

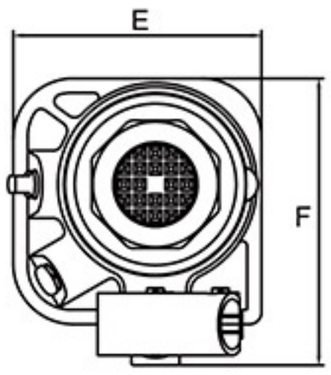

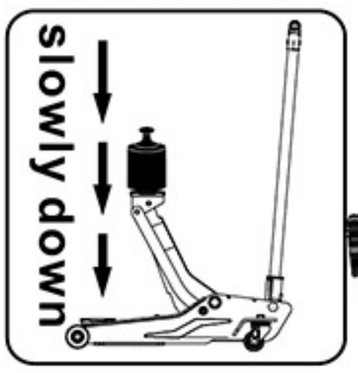

T90204D
2 Ton

T90304D 3 Ton
T90404D 4 Ton

T90504D 5 Ton
T90604D 6 Ton

T90804D
8 Ton

T91004D
10 Ton

T91204D
12 Ton

T91504D 15 Ton
T901604D 16 Ton

T92004D
20 Ton

T932011
32 Ton

T950011
50 Ton

T90404D
T90604D
T90204D
T90304D
T90504D
(With BMC)

Blow Mold Case C

Color Box B

Model	Fct.No.	Capacity	Min.Height (mm)	Lift Height (mm)	Adjustable Height(mm)	N.W. / G.W. (kg)	Package Size (mm)	QTY/CTN (pcs)	QTY/20'CY (pcs)	A	B	C	D	ExF
										(mm)				
T90204D	T90204D-GS	2Ton	140	72	48	B 2.4 / 2.5	330x235x180	6	7692	140	72	48	260	88x92
						C 2.4 / 2.74	345x350x190		5760					
T90304D	T90304D-GS	3Ton	168	98	60	B 3.2 / 3.4	330x245x210	6	5820	168	98	60	326	92x100
						C 3.2 / 3.82	460x365x255		4416					
T90404D	T90404D-GS	4Ton	168	98	60	B 3.2 / 3.4	330x245x210	6	5820	165	95	60	326	92x100
T90504D	T90504D-GS	5Ton	185	110	60	B 4.2 / 4.3	260x235x215	4	4516	185	110	60	355	96x112
						C 4.2 / 4.44	465x255x260		3680					
T90604D	T90604D-GS	6Ton	185	110	60	B 4.2 / 4.3	260x235x215	4	4516	185	110	60	355	96x112
T90804D	T90804D-GS	8Ton	190	115	60	B 4.9 / 5	280x260x220	4	3900	190	115	60	365	103x118
T91004D	T91004D-GS	10Ton	195	120	60	B 5.7 / 5.8	285x270x230	4	3388	195	120	60	375	110x123
T91204D	T91204D-GS	12Ton	200	120	60	B 6.4 / 6.5	410x165x235	3	2910	200	120	60	380	116x134
T91504D	T91504D-GS	15Ton	205	125	60	B 7.7 / 7.85	325x170x240	2	2500	205	125	60	390	133x136
T91604D	T91604D-GS	16Ton	205	125	60	B 7.7 / 7.85	320x170x240	2	2500	205	125	60	390	133x136
T92004D	T92004D-GS	20Ton	217	130	60	B 9.8 / 9.95	335x180x250	2	2000	217	130	60	407	144x152
T932011	T93202DE	32Ton	260	130	/	B 15.9 / 16.2	230x150x255	1	1234	230	130	/	360	130x170
T950011	T95001DE	50Ton	280	130	/	B 25.4 / 25.7	270x195x255	1	778	240	130	/	370	168x210

Double Pump Bottle Jacks

Heavy duty with pressure gauge

Patent Design

NEW PRODUCT

TH932001B
32 Ton

TH950001B
50 Ton

Model	Capacity	Min.Height	Adjustable Height	Size	Package Size	N.W. / G.W.	QTY/20'CY(pcs)
TH932001B	32Ton	260	420	195x225x260	235x250x310	20 / 21 kg	800
TH950001B	50 Ton	280	450	205x245x280	250x270x330	26 / 27 kg	622

NEW PRODUCT

T910001
100 Ton

T920001
200 Ton

Model	Capacity	Min.Height	Adjustable Height	Size	Package Size	N.W. / G.W.	QTY/20'CY(pcs)
T910001	100 Ton	335	180	290x240x335	335x280x380	66.5 / 69 kg	239
T920001	200 Ton	370	180	330x360x370	360x420x400	133.5 / 139.5 kg	118

Professional Welding Bottle Jack

Chrome plated

Chrome plated

Inside safety valve

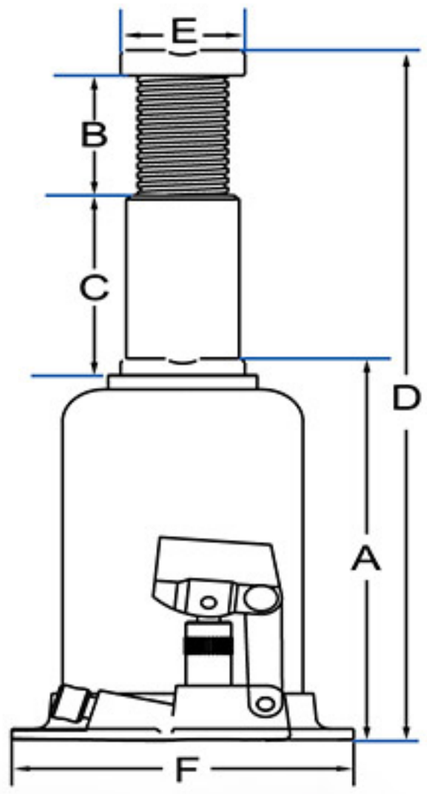

Feature:

- Zinc plated long handle allows ease of pumping.
- Welded construction NO LEAK.
- Safety valve prevents the ram from being overextended and causing damage to the cylinder.
- Inner safety valve prevent the user to adjust the system.
- Arc surface bottom of the steel base to make the load in the center of the piston.
- Prevent rust with ENP (electroless nickel plating) ram piston, make it smooth, bright, and long life.
- Double seals in the pump to prevent the oil leak.
- Light weight forged base provides more steel only where strength is required.
- This design creates a better, stronger design with the tank welded directly to the forged base.
- Longer life than normal screw connection jack due to smooth bearing surfaces and close tolerances.
- Carrying handles on big capacity jack for easy transport.

CE

Complies with ASME Safety Standards

Model	Capacity	A (mm)	B (mm)	C (mm)	D (mm)	E (mm)	F (mm)	N.W. / G.W. (kg)	Package Size (mm)	QTY/CTN (PCS)	QTY/20'CY (PCS)
TH902001	2 Ton	172	88	112	372	28	103x105	3.79 / 3.95	375x290x225	6	4248
TH903501	3.5 Ton	172	88	112	372	28	103x105	3.79 / 3.95	375x290x225	6	4248
TH905001	5 Ton	218	110	146	474	32	110x112	4.89 / 5.05	405x300x260	6	3324
TH908001	8 Ton	220	115	153	488	48	124x127.5	7.37 / 7.56	755x185x270	5	2220
TH910001	10 Ton	220	115	153	488	48	124x127.5	7.37 / 7.56	755x185x270	5	2220
TH915001	15 Ton	228	113	160	508	56	140x142	9.87 / 10.12	790x190x575	5	1660
TH920001	20 Ton	241	110	165	525	60	165x161	13.07 / 13.32	710x205x290	4	1260
TH930001	30 Ton	244	110	160	510	65	186x174	15.77 / 16.11	585x215x285	3	1041

Double Ram Bottle Jack

Complies with ASME Safety Standards CE

Feature:
- Welded construction NO LEAK.
- Inner safety valve prevents the user to adjust the system.
- Prevent rust with ENP (electroless nickel plating) ram piston, make it smooth, bright, and long life.
- Double seals in the pump help to prevent oil leaks.
- Longer life than normal screw connection jack due to smooth bearing surfaces and close tolerances.

Low Profile

Patent No.: ZL200830350236.3

NEW PRODUCT

TH810002
10 Ton

TH820002
20 Ton

Model	Capacity	Min. Height (mm)	Max. Height (mm)	Product Size (mm)	Package Size (mm)	N.W. / G.W. (kg)	QTY/CTN (PCS)	QTY/20'CY (PCS)
TH810002	10 Ton	125	215	180x180x140	560x390x180	7.7 / 8	6	2250
TH820002	20 Ton	150	245	186x174x165	580x210x180	11.2 / 11.5	3	1560

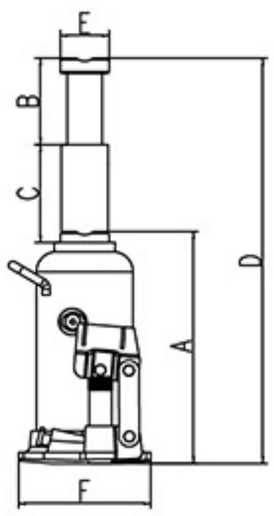

TH804001
TH805001

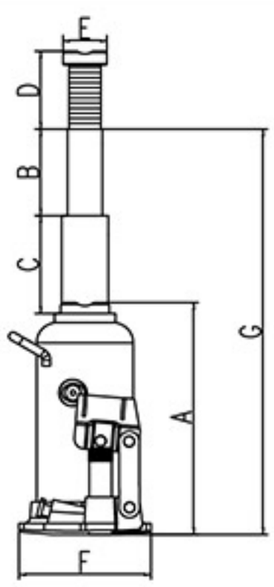

TH810001
TH812001

Complies with ASME Safety Standards CE

Chrome Plated

TH805001
5 Ton

TH810001
10 Ton

TH812001
12 Ton

Model	Capacity	A (mm)	B (mm)	C (mm)	D (mm)	E (mm)	F (mm)	G (mm)	Product Size (mm)	Package Size (mm)	N.W. / G.W. (kg)	QTY/CTN (PCS)	QTY/20'CY (PCS)
TH805001	5 Ton	230	146	138	500	41	130x136	/	136x130x230	450x320x275	7.5 / 7.8	6	2148
TH810001	10 Ton	210	120	120	70	48	165x161	450	165x161x208	760x210x265	10.7 / 11	4	1524
TH812001	12 Ton	235	135	130	90	56	186x174.5	500	186x175x230	570x220x290	14.9 / 15.2	3	1104

Double Ram Bottle Jacks

- Dual-stage, steel hardened rams allow for longer travel. Lower retracted heights and higher extended heights. Heat treated saddle provides generous lifting area and secure grip.
- A wide, rugged base provides stability and strength. Safety bypass valves prevent overloading.

NEW PRODUCT

Model	Capacity	Min. Height (mm)	Lifting. Height (mm)	Adjustable Height (mm)	Max Height (mm)
TF0202-GS	6 Ton	150	160	60	370
TF0402-GS	8 Ton	227	170	60	390

Model	N.W. / G.W. (kg)	Package Size (mm)	QTY/CTN (PCS)	QTY/20'CY (PCS)
TF0202-GS	4.9 / 5.4	440x306x175	6	3120
TF0402-GS	6.4 / 6.95	320x320x185	4	2450

Welded Bottle Jacks

NEW PRODUCT

Double Ram

Model	Capacity	Min. Height (mm)	Lifting. Height (mm)	Adjustable Height (mm)	Product Size (mm)	N.W. / G.W. (kg)	Package Size (mm)	QTY/CTN (PCS)	QTY/20'CY (PCS)
TH80202X	2 Ton	170	210	/	87X108.5X170	2.6 / 2.7	360x255x200	6	7200
TH80402X	4 Ton	170	190	60	97X117X170	3.36 / 3.5	280x250x200	4	5572
TH80602X	6 Ton	170	200	60	115X134.5X170	4.7 / 4.85	310x280x200	4	4040
TH80802X	8 Ton	170	200	60	115X134.5X170	4.7 / 4.85	310x280x200	4	4040
TH81002X	10 Ton	180	210	60	124X152X180	7.65 / 7.8	315x185x210	2	2514

Pneumatic Hydraulic Bottle Jacks

TRQ05002
5 Ton

TQ12002
12 Ton

TQ20002
20 Ton

TRQ30002
30 Ton

TRQ35002
35 Ton

Complies with ASME Safety Standards

CE

TRQ50002
50 Ton

Model	Capacity	Min. Height (mm)	Lifting. Height (mm)	Adjustable Height (mm)	Max. Height (mm)	N.W. / G.W. (kg)	Package Size (mm)	QTY/20'CY (PCS)
TRQ05002	5 Ton	210	140	80	430	6 / 7	170x200x230	2300
TQ12002	12 Ton	260	170	80	510	12 / 13	280x170x295	1290
TQ20002	20 Ton	265	165	80	510	16 / 17	300x190x285	980
TRQ30002	30 Ton	250	150	/	405	21 / 22	290x220x270	690
TRQ35002	35 Ton	250	150	/	405	21 / 22	290x220x270	690
TRQ50002	50 Ton	290	160	/	450	34 / 36	460x280x310	455

Pneumatic Hydraulic Bottle Jacks

COMMERCIAL 3 YEAR WARRANTY

NEW PRODUCT

YELLOW JACKET

Polyurethane Seals

Made to resist higher abrasion, cut and tear resistance making it last longer than traditional rubber O-rings

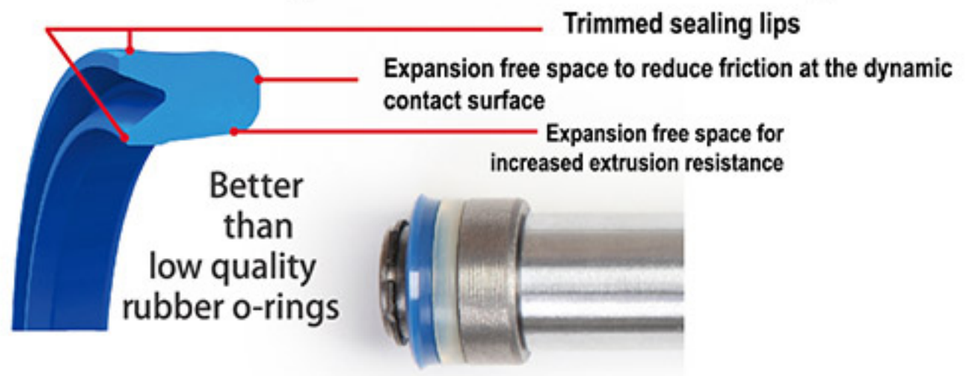

TQ30007
30 Ton

DESIGNED TO LASTS 10 TIMES LONGER THAN TRADITIONAL JACKS
EXTEND LIFT UP TO 3,000+ LIFTING CYCLES

- Chrome Plated Cylinder Ram
- High Quality Aluminum Air Pump
- Welded Construction

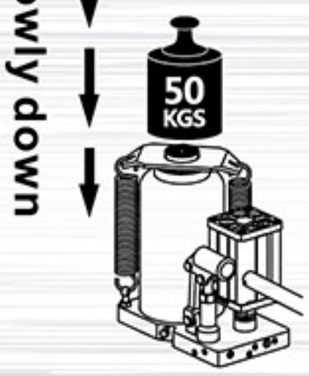

Two speed action
(Slow down with loading)
50KGS to active

TQ12007
12 Ton

TQ20007
20 Ton

Model	Capacity	Min.Height (mm)	Max.Height (mm)	Adjustable Height (mm)	N.W/G.W (kg)	Package Size (mm)	Qty/20'CY (PCS)
TQ12007	12Ton	260	505	80	12 / 13	280x170x295	1290
TQ20007	20Ton	255	500	80	17 / 18	300x190x285	930
TQ30007	30Ton	265	500	100	22 / 23.5	310x205x295	710

www.tongrunjacks.com

Professional Support Jack

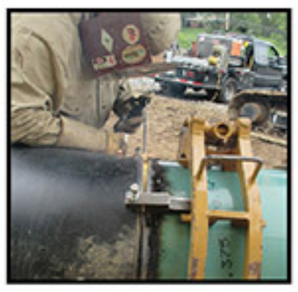

SJ05
5 Ton

SJ10
10 Ton

SJ15
15 Ton

SJ20
20 Ton

SJ25
25 Ton

Model	SJ05	SJ10	SJ15	SJ20	SJ25
Capacity	5 Ton	10 Ton	15 Ton	20 Ton	25 Ton
Min. Height (mm)	240	295	358	405	425
Lifting. Height (mm)	100	160	190	230	246
Max. Height (mm)	340	450	556	632	675
N.W. / G.W. (kg)	4.2 / 4.6	7.1 / 7.7	10.5 / 11.2	15.6 / 17	18.3 / 19
Package Size (mm)	605x315x305	520x350x361	390x380x420	430x230x470	227x227x480
QTY/CTN (PCS)	8	6	4	2	1
QTY/20'CY (PCS)	3648	2178	1500	988	884

Mechanical Screw Jack

TRB1003B
3.2 Ton

TRB1005B
5 Ton

TRB1008B
8 Ton

TRB1010B
10 Ton

TRB1016B
16 Ton

TRB1020B
20 Ton

TRB1025B
25 Ton

TRB1032B
32 Ton

A Mechanical Screw Jack has a compact structure, small volume, is light weight and easy to carry. Screw Jacks are widely used in factories, warehouses, bridges, shipyards, fabrications and construction industries.

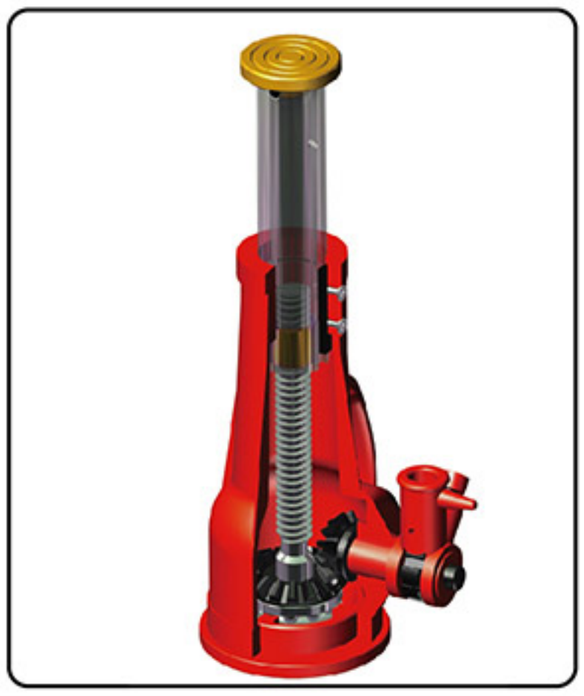

Model	TRB1003B	TRB1005B	TRB1008B	TRB1010B	TRB1016B	TRB1020B	TRB1025B	TRB1032B
Capacity	3.2Ton	5Ton	8Ton	10Ton	16Ton	20Ton	25Ton	32Ton
Min.Height(mm)	220	250	250	280	320	325	275	395
Max.Height(mm)	330	380	380	430	500	505	405	595
N.W./G.W.(Kg)	17.2/18	20.4/21	24.8/25.5	21.6/22.5	32.1/33	32.7/33.5	28.5/29.5	34.6/35.5
Package Size(mm)	535x255x160	550x287x180	550x287x180	510x310x190	555x355x210	555x355x210	555x355x210	445x420x235
QTY/CTN(PCS)	4	4	4	3	3	3	3	2
QTY/20'CY(PCS)	3732	3200	2632	2238	1527	1503	1707	946

Hydraulic Trolley Jacks

2 TON

B C

TA820011

2 TON

B C

Complies with ASME Safety Standards

TA820014

360° Rotating Handle

2 TON

T820050

T820050R
(With rotating handle)

1.5 TON

TA82008

B C

2 TON

Complies with ASME Safety Standards

2 TON

TA820050T

2 TON

T82000H

C Heavy Duty Blow Case

Full Color Box B

Model	Capacity	Min. Height (mm)	Max. Height (mm)	N.W. / G.W. (kg)		Product Size (mm)	Package Size (mm)	QTY/20'CY (PCS)
				B Color Box	C Blow Case			
TA820011	2 Ton	140	285	5.6 / 6.2	5.6 / 6.5	390x195x140	400x205x145 / 415x220x150	2600 / 2200
TA82008	1.5 / 2 Ton	130	300	6.8 / 7.5	6.8 / 7.8	425x190x130	430x200x135 / 445x225x145	2500 / 2050
T82000H	2 Ton	135 / 150	342 / 357	9.3 / 10.34	/	470x196x135	490x240x145	1600
T820050	2 Ton	135	340	8.7 / 9.4	8.7 / 9.9	447x196x135	460x215x145 / 495x235x155	1950 / 1498
T820050R	2 Ton	135	340	8.8 / 9.5	8.8 / 10.2	447x196x145	460x215x160 / 495x235x167	1820 / 1391
T820014	2 Ton	135	330	7.3 / 7.9	7.3 / 8.4	465x195x135	470x205x145 / 480x225x150	2050 / 1700
TA820050T	2 Ton	130	340	9.4 / 9.7	9.4 / 11	469x206x130	480x230x163 / 500x235x160	1670 / 1390

Hydraulic Trolley Jacks

B C 2 TON

TA82001

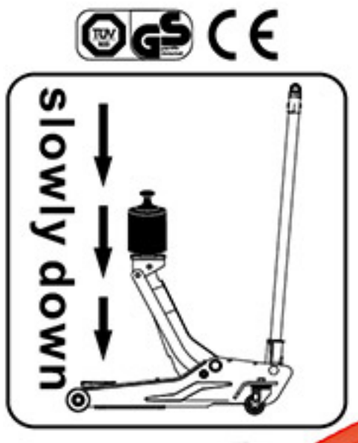

B 2 TON

T82007

B C 2 TON

TA820037

B C

T825051

2 TON 2.5 TON

Complies with ASME Safety Standards

2 TON 2.5 TON

Complies with ASME Safety Standards

360° Rotating Handle

B C T825010
T825010R (With rotating handle)

Model	Capacity	Min. Height (mm)	Max. Height (mm)	N.W. / G.W. (kg)		Product Size (mm)	Package Size (mm)	QTY/20'CY (PCS)
				B Color Box	C Blow Case			
TA82001	2 Ton	85	330	10.5 / 11.5	10.5 / 12	534x216x135	548x230x160 / 583x251x156	1450 / 1300
T82007	2 Ton	130	350	11 / 11.7	11 / 12.52	493x222x144	495x235x165	1430
TA820037	2 Ton	80	380	11.4 / 12	11.4 / 13.2	566x206x130	610x275x145	1400
T825051	2.5 Ton	85	380	12.6 / 13.6	/	569x214x130	613x265x150	1080
T825010 T825010R	2 / 2.5 Ton	89	359	14.2 / 15.2	14.2 / 16.1	556x234x140 / 556x234x150	610x275x160 / 590x260x160	1008 / 1000

Hydraulic Trolley Jacks

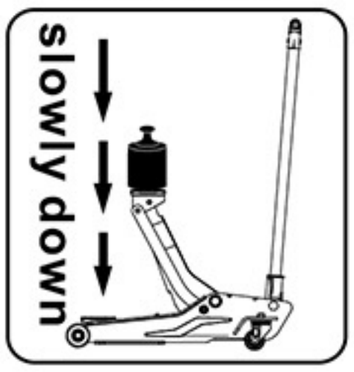

2 TON
T82003

2.25 TON
T82253
Complies with ASME Safety Standards

2 TON
TA82005
Complies with ASME Safety Standards

3 TON
T830020
T830020H

2.5 TON
T83006F (With rotating handle)
T83006B

3 TON
Complies with ASME Safety Standards

3 TON
T830013
Complies with ASME Safety Standards

Model	Capacity	Min. Height (mm)	Max. Height (mm)	N.W. / G.W. (kg) Color Box	N.W. / G.W. (kg) Blow Case	Product Size (mm)	Package Size (mm)	QTY/20'CY (PCS)
TA82005	2 Ton	135	385	10.3 / 11.3		520x195x135	530x205x145	1486
T83006B	2.5 / 3 Ton	150	530	19.3 / 21		625x242x158	675x285x180	768
T83006F	2.5 / 3 Ton	150	530	19.3 / 21.2		625x242x158	675x285x180	768
T82003	2 Ton	130	375	11.8 / 12.3	11.8 / 13.2	531x223x132	555x250x160 / 580x250x160	1288 / 1188
T82253	2.25 Ton	130	375	11.8 / 12.3	11.8 / 13.2	531x223x132	555x250x160 / 570x245x160	1288 / 1196
T830020	3 Ton	135	400	16.4 / 17		592x240x146	630x280x165	1008
T830020H	3 Ton	135	400	16.4 / 17		592x240x146	630x280x165	1008
T830013	3 Ton	135	380	13.6 / 14.8		531x225x135	560x250x160	1288

Trolley Jack Combo Set

2 Ton Trolley Jack (TA820014)
Folding Creeper (TRH6454B)
Jack Stands (T42002X)

Complies with ASME Safety Standards

N.W.(kg): 17.6 kgs
G.W.(kg): 19 kgs
Package Size: 485x375x400 mm
QTY/20'CY: 330 PCS

2 Ton Trolley Jack (T820050)
Wheel Chocks (TRF3553)
Work Gloves (TRY9007)
Knee Pad (TRL7001)

N.W.(kg): 9.5 kgs
G.W.(kg): 10.96 kgs
Package Size: 505x235x160 mm
QTY/20'CY: 1498 PCS

2 Ton Trolley Jack (T820050)
Knock Down Creeper (TRH6454B)
Wheel Chocks (TRF3553)
2 Ton Jack Stand (T42002)
14" Lug Wrench
Size: 17/19/21/23 mm (TRX31101)

N.W.(kg): 20.8 kgs
G.W.(kg): 22.7 kgs
Package Size: 505x390x385 mm
QTY/20'CY: 396 PCS

2 Ton Trolley Jack (T820050)
2 Ton Jack Stand (T42004)
Wheel Chock (TRF3553)
Knock Down Creeper (TRH6454B)
Oil pan (TRY2006YH)

14" Lug Wrench
Size: 17/19/21/23 mm (TRX31101)
Magnetic Dish (TRY60.0001)
Oilfilter Wrench (TRY032602)

N.W.(kg): 21 kgs
G.W.(kg): 23.5 kgs
Package Size: 480x390x395 mm
QTY/20'CY: 330 PCS

Combination Kit

2 Ton Trolley Jack (T820050)
Folding Creeper (TRH6454B)
Wheel Chocks (TRF3553)
Knee Pad (TRL7001)

N.W.(kg): 15.4 kgs
G.W.(kg): 17.2 kgs
Package Size: 490x385x310 mm
QTY/20'CY: 462 PCS

2 Ton Combination Kit

2 Ton Trolley Jack (T820050)
2 Ton Foldable Jack Stand (T42004)
Wheel Chocks (TRF3553)

N.W.(kg): 12.6 kgs
G.W.(kg): 14.5 kgs
Package Size: 520x300x165 mm
QTY/20'CY: 1064 PCS

2 Ton Service Jack & Stands Combo

2 Ton Trolley Jack (T820050)
3 Ton Jack Stands (T41507)
Wheel Chocks (TRF3553)
14" Lug Wrench (TRX31101)

N.W.(kg): 15.6 kgs
G.W.(kg): 17.2 kgs
Package Size: 470x290x410 mm
QTY/20'CY: 480 PCS

Hydranlic Garage Jack

Special Quality Design

· Polished and treated cylinder rams use high performance seals.

· Polished inner cylinder walls extend the life of the seals to minimize abrasion and wear.

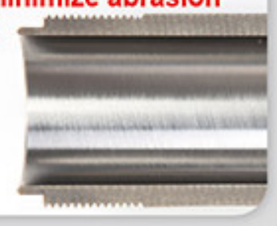

With TÜV GS CE

3 TON

T830025

Complies with ASME Safety Standards

3 TON

T830022

Complies with ASME Safety Standards

2.5 TON

T825021

Model	Capacity	Min. Height (mm)	Max. Height (mm)	Product Size (mm)	N.W. / G.W. (kg)	Package Size (mm)	QTY/20'CY (PCS)
T830025	3 Ton	130	465	572x328x175	27.4 / 28.9	620x380x215	540
T825021	2.5 Ton	140	520	662x342x180	34.1 / 36.1	733x380x225	450
T830022	3 Ton	140	520	662x344x180	35 / 36.3	733x380x225	528

www.tongrunjacks.com

Hydraulic Garage Jack

Special Quality Design

· Polished and treated cylinder rams use high performance seals.

· Polished inner cylinder walls extend the life of the seals to minimize abrasion and wear.

With TÜV GS CE

2.5 TON

3 TON

TÜV GS CE

Complies with ASME Safety Standards

TZ830018

Low Profile 85 mm Min. Height

3 TON

TÜV GS CE

T830023

T83502

3 TON

3.5 TON

TÜV GS CE

Complies with ASME Safety Standards

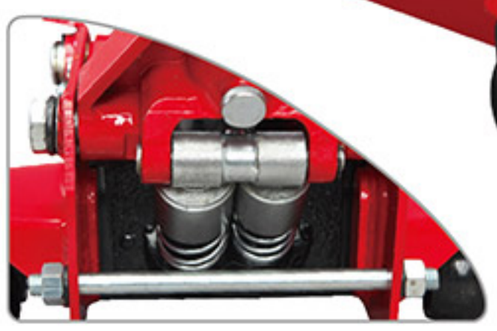

Fast Lifting Dual Pump

Quick Lift
Only One Pump

Model	Capacity	Min. Height (mm)	Max. Height (mm)	Product Size (mm)	N.W. / G.W. (kg)	Package Size (mm)	QTY/20'CY (PCS)
TZ830018	2.5 / 3 Ton	87	455	640x342x175	33 / 34.6	700x390x215	480
T830023	3 Ton	130	465	630x328x165	28.7 / 30.2	675x380x213	528
T83502	3 / 3.5 Ton	145	500	685x346x180	37.2 / 38.4	740x380x205	495

Professional Garage Jack

Special Quality Design

· Polished and treated cylinder rams use high performance seals.

· Polished inner cylinder walls extend the life of the seals to minimize abrasion and wear.

With TÜV GS CE

Fast Lifting Dual Pump

3 TON

TZ830026X

TÜV GS CE

Low Profile 80 mm Min. Height

3 TON

TÜV GS CE

3.5 TON

Complies with ASME Safety Standards

T83508D

Low Profile 98 mm Min. Height

3 TON

Complies with ASME Safety Standards

T830036

Low Profile 80 mm Min. Height

NEW PRODUCT

Model	Capacity	Min. Height (mm)	Max. Height (mm)	Product Size (mm)	N.W. / G.W. (kg)	Package Size (mm)	QTY/20'CY (PCS)
TZ830026X	2.5 Ton	80	580	722x328x150	34.1 / 36	780x400x185	470
T83508D	3 /3.5 Ton	98	535	750x345x170	43.3 / 45.1	815x400x200	385
T830036	3 Ton	80	465	710x380x170	31 / 33	690x350x160	520

Professional Garage Jack

Model	Capacity	Min. Height (mm)	Max. Height (mm)	Product Size (mm)	N.W. / G.W. (kg)	Package Size (mm)	QTY/20'CY (PCS)
TZ820051	2 Ton	75	615	850x380x160	47.7 / 52	900x430x175	323
T84007	4 Ton	98	508	726x342x170	43.1 / 45.6	790x400x200	385

www.tongrunjacks.com

PROFESSIONAL GARAGE JACK

3 TON

COMMERCIAL 3 YEAR WARRANTY

Φ40mm Piston for saving operating power

Patent suppoting part with OE sealing

Patent sealing construction for long service life

1) W510 metal
2) integral welding with robots
3) 10mm thickness lifting arm&tie plate

DESIGNED TO LASTS 10 TIMES LONGER THAN TRADITIONAL JACKS
EXTEND LIFT UP TO 3,000+ LIFTING CYCLES

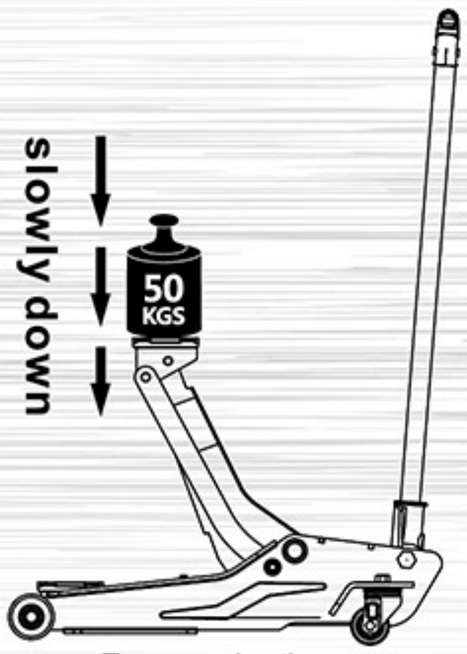

Two speed action
(Slow down with loading)
50KGS to active

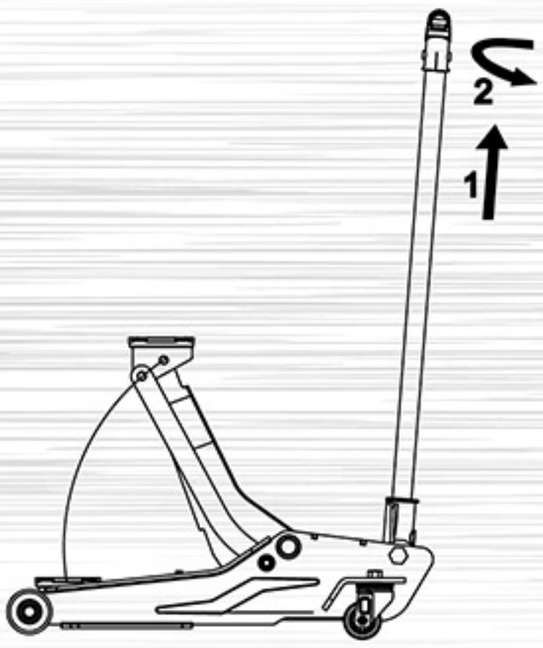

Dead-man Principle
(Self-return handle)

Foot Padal

Magnetic
Tool Panel

3 TON

TZA830003

Designed Rubber pad
(Φ130mm)

Fast Lifting Dual Pump

Nylon Wheel

Low Profile 95 mm Min. Height

Model	Capacity	Min Height (mm)	Max Height (mm)	Product Size (mm)	N.W. / G.W. (kg)	Package Size (mm)	QTY/20'CY (PCS)
TZA830003	3 TON	95	505	720x308x1195	41 / 43	820x380x190	400

www.tongrunjacks.com

3 TON SUPER-DUTY JACK

COMMERCIAL 3 YEAR WARRANTY

LIFTS UP TO 75% FASTER

INDUSTRY LEADING LIFTING RANGE: 4" TO 23"

Patent No.: ZL201630443762.9

DESIGNED TO LASTS 10 TIMES LONGER THAN TRADITIONAL JACKS
EXTEND LIFT UP TO 5,000+ LIFTING CYCLES

- 85mm front wheel with greaseable zerk fittings
- EXTRA-LARGE Replaceable rubber lifting saddle
- (5) Zerk grease fittings
- Rear swivel casters with ball bearings
- MAGNETIC TOOL PANEL
- UNIVERSAL JOINT RELEASE Adds precision control

Polyurethane Seals

Made to resist higher abrasion, cut and tear resistance making it last longer than traditional rubber O-rings

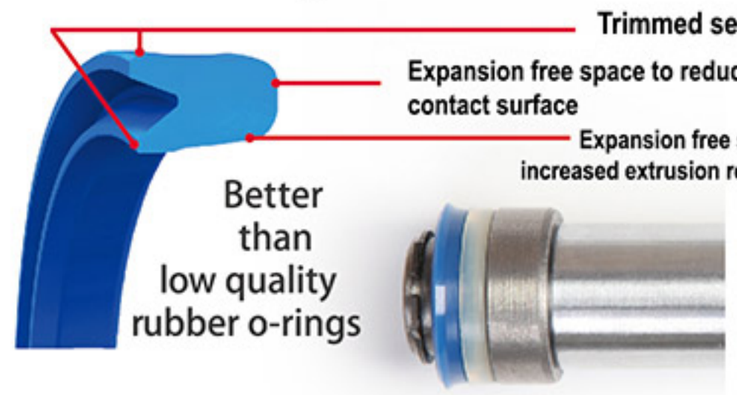

LIFTS UP TO 75% FASTER

Double pump design reaches max. Rise height in under 5 pumps

585mm

100mm

Model	Capacity	Min Height (mm)	Max Height (mm)	Product Size (mm)	N.W. / G.W. (kg)	Package Size (mm)	QTY/20'CY (PCS)
T830008	3 TON	100	585	846x398x168	51.5 / 55.9	900x455x185	300

Rubber Jack-Pad

Model	TRY8011
Diameter(mm)	100
Thickness(mm)	28
Package Size(mm)	530x360x225
QTY/CTN(PCS)	100

Applied Model: T820033 series, T820033X series, T82000D, T82000R, T82000CF, T82004, T82004C

Model	T820033E-2
Diameter(mm)	39
Thickness(mm)	15
Package Size(mm)	400x165x200
QTY/CTN(PCS)	100

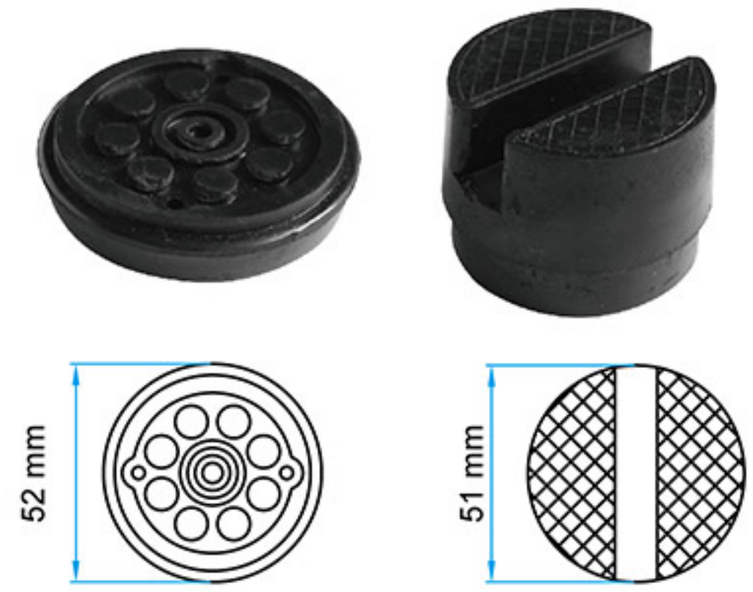

Applied Model: T825010 series, T825010C series, T820037, T830020

Model	T825010CE-2	T825010-9
Diameter(mm)	52	51
Thickness(mm)	13	37
Package Size(mm)	430x180x175	310x310x310
QTY/CTN(PCS)	100	60

Applied Model: T83006, T83006B, T83006C, T83006F

Model	T83006FE-3
Diameter(mm)	44
Thickness(mm)	15
Package Size(mm)	410x170x200
QTY/CTN(PCS)	100

Applied Model: T830008

Model	T830021-3
Diameter(mm)	137
Thickness(mm)	20
Package Size(mm)	400x280x320
QTY/CTN(PCS)	90

Applied Model: T830023, T830025

Model	T830025-8
Diameter(mm)	96.5
Thickness(mm)	23
Package Size(mm)	315x315x365
QTY/CTN(PCS)	135

Applied Model: T830018

Model	T830018-2
Diameter(mm)	96
Thickness(mm)	8
Package Size(mm)	315x315x320
QTY/CTN(PCS)	135

Applied Model: T82258, T83502, T83000E T830022

Model	T83502-5
Diameter(mm)	127
Thickness(mm)	20
Package Size(mm)	572x572x320
QTY/CTN(PCS)	135

Applied Model: T82258, T83502, T83000E, T830022

Model	T83502T-3a
Diameter(mm)	106
Thickness(mm)	27
Package Size(mm)	350x350x425
QTY/CTN(PCS)	135

Nylon Wheel

FORNT WHEEL

Applied Model: T83502 series, T830021 series, T83000F, T830022, T830021Q, T830021B, T83000E

Model	T830021-4
Diameter(mm)	88
Thickness(mm)	46
Materials	PA66

FORNT WHEEL

Applied Model: T83508 series, T830025 series, T830018Z series, T84008, T84007, T830023 series

Model	T830023B-1
Diameter(mm)	80
Thickness(mm)	47
Materials	PA66

FORNT WHEEL

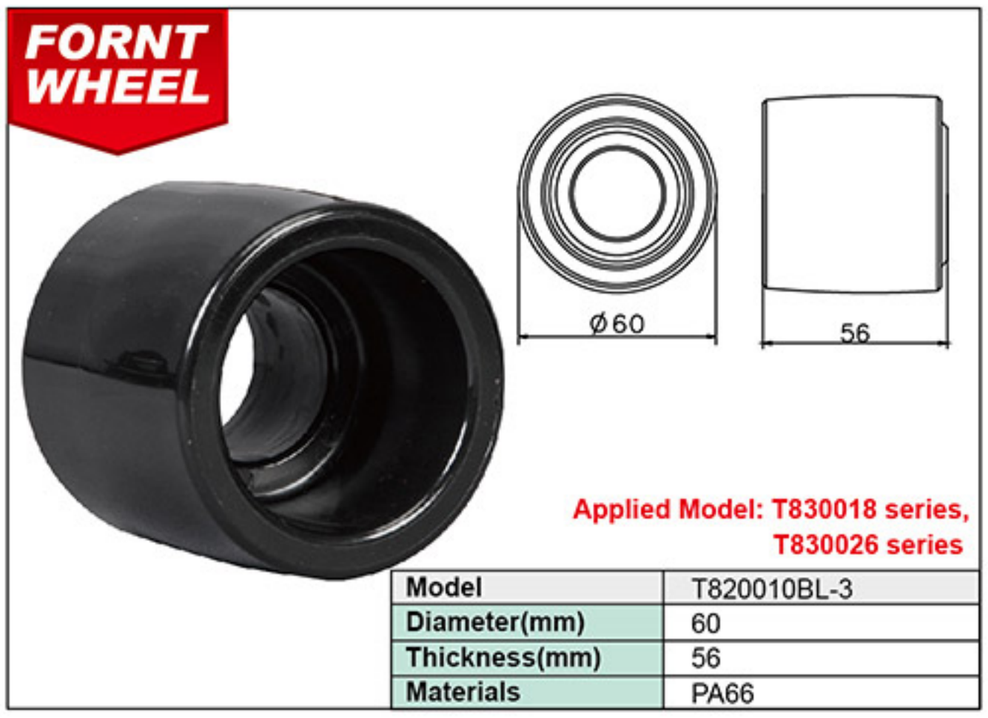

Applied Model: T830018 series, T830026 series

Model	T820010BL-3
Diameter(mm)	60
Thickness(mm)	56
Materials	PA66

REAR WHEEL

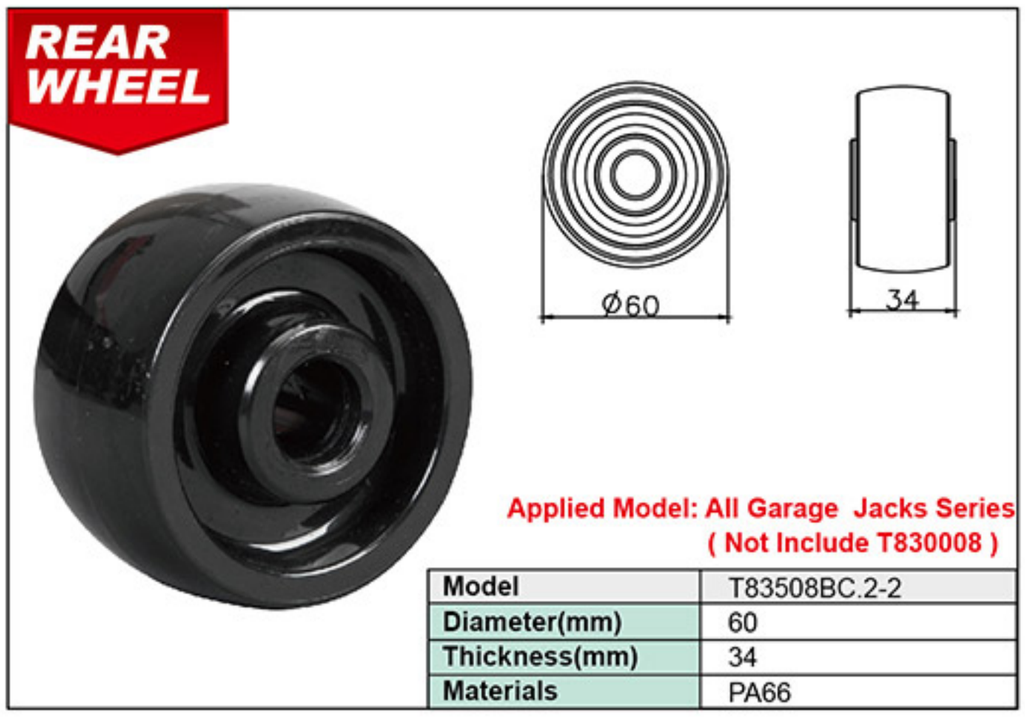

Applied Model: All Garage Jacks Series (Not Include T830008)

Model	T83508BC.2-2
Diameter(mm)	60
Thickness(mm)	34
Materials	PA66

FORNT WHEEL

Applied Model: T825011CL series

Model	T825011BCL-4
Diameter(mm)	66
Thickness(mm)	42
Materials	PA66

REAR WHEEL

Applied Model: T825011CL series

Model	T825011BCL.2-1
Diameter(mm)	43.5
Thickness(mm)	25
Materials	PA66

Professional Garage Jack

Features:

- Professional stronger construction
- Compact and space-saving
- Protector, top saddle protection for safter lifting
- Polyamide wheels - for quietly positioning
- Long life using more than 1000 times
- 3 years guarantee

Products on this page are covered by international patents

Patent No.: ZL201110232918.5
ZL201210130146.9

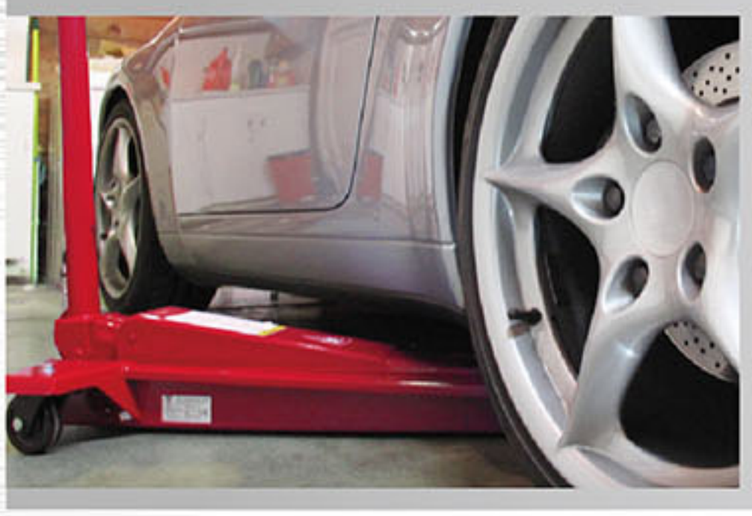

Special Quality Design

· Polished inner cylinder walls extend the life of the seals to minimize abrasion and wear.

· Polished and treated pump cylinder pistons use high performance seals.

DESIGNED TO LASTS 10 TIMES LONGER THAN TRADITIONAL JACKS

EXTEND LIFT UP TO 3,000+ LIFTING CYCLES

CE

1.5 TON

TR15005

Model	Capacity	Min. Height (mm)	Max. Height (mm)	Net Weight (kg)	Gross Weight (kg)	Package Size (mm)	QTY/20'CY (PCS)
TR15005	1.5 Ton	135	855	50	54	1135x490x220	220

Low Profile Garage Jack

Special Quality Design

- Polished and treated cylinder rams use high performance seals.

- Polished inner cylinder walls extend the life of the seals to minimize abrasion and wear.

- Polished and treated pump cylinder pistons use high performance seals.

CE

Model	Capacity	Min. Height (mm)	Max. Height (mm)	Product Size (mm)	N.W. / G.W. (kg)	Package Size (mm)	QTY/20'CY (PCS)
T820031	2 Ton	70	500	785x350x212	42 / 45	935x430x220	300
T820031BS	2 Ton	80	510	845x400x224	42 / 45	985x460x220	270
T820028	2 Ton	76	510	940x365x212	45 / 48	1065x450x215	260

Products on this page are covered by international patents

Patent No.:
ZL201220168382.5
ZL201210130197.1
ZL201210130146.9
ZL201220319166.6
ZL200920283713.8
ZL201210072632.X
ZL201030128868.2

- PU Material Front Wheel

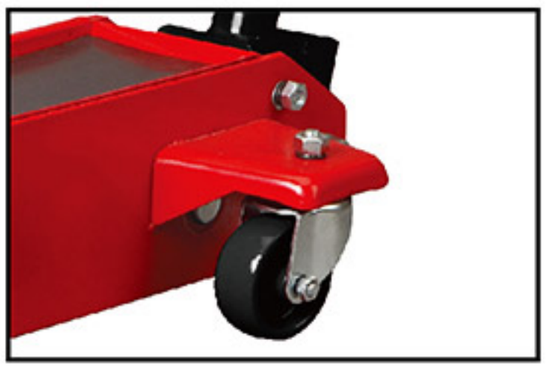

- Nylon rear wheel with ball bearing

- Foot pedal for quick lifting saddle to load

- Magnetic tools tray for carrying objects

- Slowly down with loading

Low Profile Garage Jack

Products on this page are covered by international patents

Patent No.:
ZL201220168382.5 ZL201220319166.6
ZL201210130197.1 ZL200920283713.8
ZL201210130146.9 ZL201210072632.X
ZL201030128868.2

Special Quality Design

· Polished and treated cylinder rams use high performance seals.

· Polished inner cylinder walls extend the life of the seals to minimize abrasion and wear.

· Polished and treated pump cylinder pistons use high performance seals.

Model	T830031BS
Capacity	3 Ton
Min. Height(mm)	80
Max. Height(mm)	500
Product Size(mm)	822x420x232
N.W. / G.W. (kg)	53 / 57
Package Size(mm)	1015x510x210
QTY/20'CY(PCS)	242

3 TON

T830031BS

Low Profile 80 mm Min. Height

Double Nylon Wheels

Model	T830028
Capacity	3 Ton
Min. Height(mm)	140
Max. Height(mm)	525
Product Size(mm)	1150x350x180
N.W. / G.W. (kg)	47 / 51
Package Size(mm)	1295x420x240
QTY/20'CY(PCS)	189

3 TON

T830028

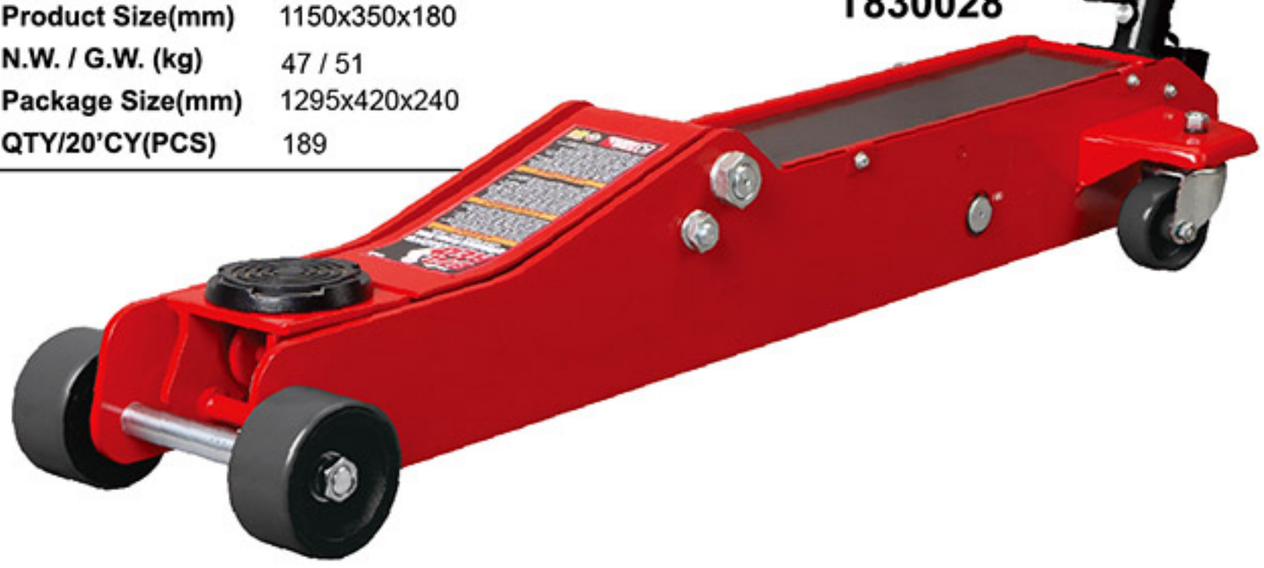

- Heavy duty nylon front wheel with ball bearing

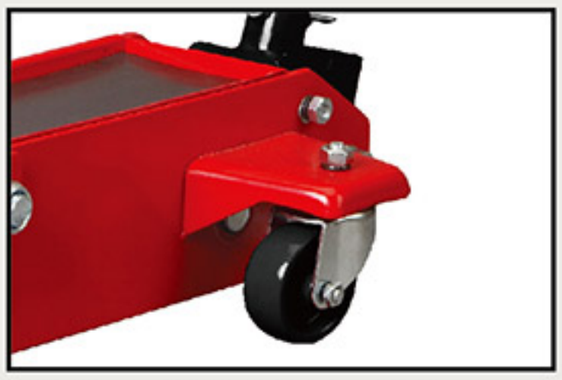

- Nylon rear wheel with ball bearing

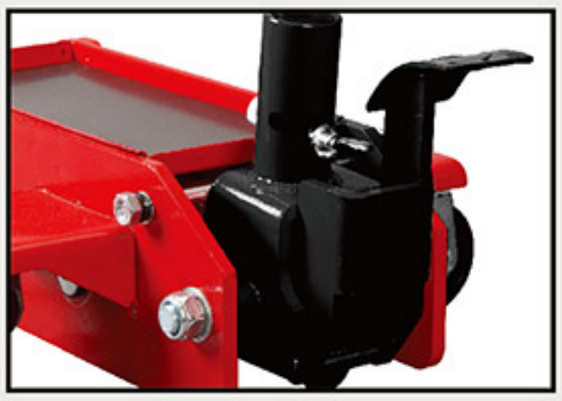

- Foot pedal for quick lifting saddle to load

- Magnetic tools tray for carrying objects

- Slowly down with loading

Aluminum Racing Jack

3 TON

T43004L

Model	T43004L
Capacity	3 Ton
Min. Height	272 mm
Max. Height	397 mm
Product Size	190x173x272 mm
Package Size	800x290x180 mm
N.W./G.W.	4.5 / 4.63 (kg/pair)
QTY/CTN	6 pairs
QTY/20'CY	3522 PCS

Easy Carrying

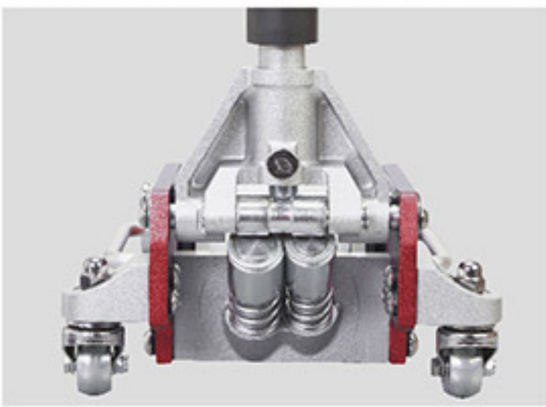

Fast Lifting Dual Pump

3 TON

T830003XL

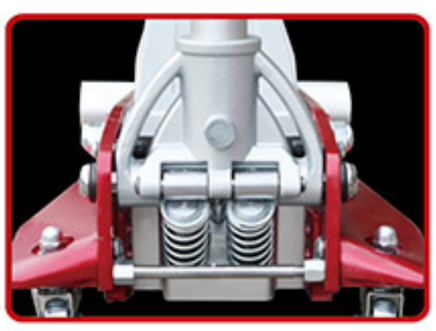

Fast Lifting Dual Pump

2 TON

T820010L

Model	Capacity	Min. Height(mm)	Max. Height(mm)	Product Size(mm)	Package Size(mm)	N.W./G.W.(kg)	QTY/20'CY (PCS)
T830003XL	3Ton	85	365	573X253X137	620X295X180	12 / 13.3	790
T820010L	2 Ton	98	480	730X320X180	790X385X220	24.4 / 26.1	420

Aluminum / Steel Floor Jack

Model	T815016L
Capacity	1.5 Ton
Min. Height	90 mm
Max. Height	358 mm
Package Size	595x295x180
N.W./G.W.	14.3 / 15.6
QTY/20'CY	950 PCS

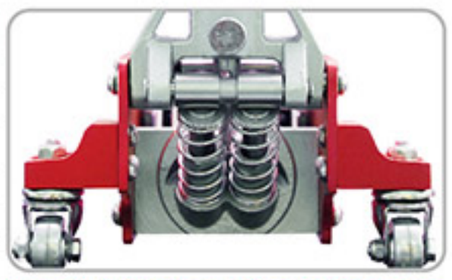

Fast Lifting Dual Pump

- Fast action with dual lifting pistons
- Rubber padded saddle rotates 360 degree to provide protection and stability
- Durable, light-weight steel and aluminum construction

1.5 TON

T815016L

Aluminum / Steel Floor Jack

3 TON

T430010L

Model	T430010L
Capacity	3 Ton
Min. Height	268
Max. Height	393
Product Size	160x143x245
Package Size	680x380x210
N.W./G.W.	4.2 / 4.6
QTY/CTN	6 pairs
QTY/20'CY	2640 pairs

Model	T825011CL
Capacity	2.5 Ton
Min. Height(mm)	100
Max. Height(mm)	465
Product Size(mm)	659X289X165
Package Size(mm)	720X350X200
N.W./G.W.(kg)	26.3 / 27.8
QTY/20'CY (PCS)	528

Low Profile 100 mm Min. Height

2.5 TON

T825011CL

Aluminum / Steel Racing Jack

3 TON

T830011L

Low Profile 100 mm Min. Height

Low Profile

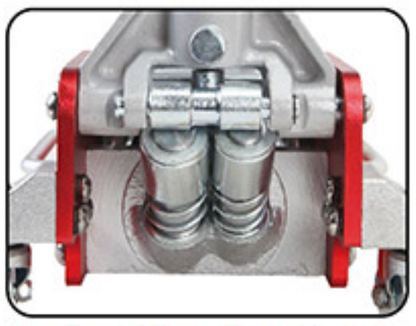

Fast Lifting Dual Pump

Model	T830011L
Capacity	3 Ton
Min. Height(mm)	100
Max. Height(mm)	465
Product Size(mm)	659X292X165
Package Size(mm)	720X350X200
N.W./G.W.(kg)	26.6 / 28.1
QTY/20'CY (PCS)	528

Heavy Duty Long Floor Jack

2 TON
TR20003

5 TON
TR50001

W/C Wooden Box

3 TON
TR30002

CE

- Ideal for lifting heavy trucks, buses, agriculture and constructions equipments.
- Heavy duty steel frame for maximum durability.
- Long frame for easy access lift point.
- Safety-overload system.
- Additional foot pedal control provides quick set-up and rise.
- Oversized swivel casters for easy mobility.

10 TON
TR100001

W/C Wooden Box

15 TON
TRA150001-1
TRA150001-K(Quick Lift)

20 TON
TRA200001-1
TRA200001-K(Quick Lift)

W/C Wooden Box

Model	Capacity	Min. Height (mm)	Max. Height (mm)	Product Size (mm)	N.W. / G.W. (kg)	Package Size (mm)	QTY/20'CY (PCS)
TR20003	2 Ton	140	800	1184X435X188	58 / 64	1275x480x230	200
TR30002	3 Ton	140	665	1100X436X186	54 / 60	1185x480x230	200
TR50001	5 Ton	160	560	1412X418X186	85 / 100	W/C 1618x475x350	90
TR100001	10 Ton	160	560	1540X486X255	129 / 150	W/C 1710x525x395	65
TRA150001-1	15 Ton	220	680	1550X560X305	165 / 180	W/C 1703x523x384	95
TRA150001-K	15 Ton	220	680	1550X560X305	165 / 180	W/C 1650X370X430	95
TRA200001-1	20 Ton	220	680	1550X560X305	215 / 230	W/C 1650X370X430	75
TRA200001-K	20 Ton	220	680	1550X560X305	215 / 230	W/C 1650X370X430	75

Pneumatic Jack

Model	TRA25-2A	TRA40-2A	TRA50-2A	TRA80-2A
Capacity	25T/10T	40T/20T	50T/25T	80T/50T
Air Pressure	0.9-1.2Mpa	0.9-1.2Mpa	0.9-1.2Mpa	0.9-1.2Mpa
Min. Height (mm)	185	190	215	230
Lifting Height	25T:97mm 10T:95mm	40T:106mm 20T:88mm	50T:115mm 25T:114mm	80T:111mm 50T:102mm
Extension Height (mm)	75+45	75+ 45	75+45	75+45
N.W. / G.W. (kg)	53 / 59	62 / 70	73 / 80	106 / 115
Package Size (mm)	840x300x270	840x300x270	840x290x230	980x390x320
Handle Box (mm)	1390x280x110	1390x280x110	1390x280x110	1390x280x110
QTY / 20'CY (PCS)	160	160	160	150

PROFESSIONAL **PNEUMATIC** CE

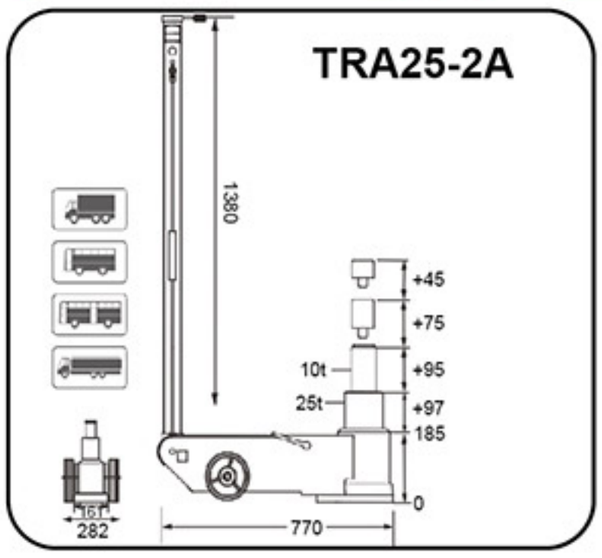

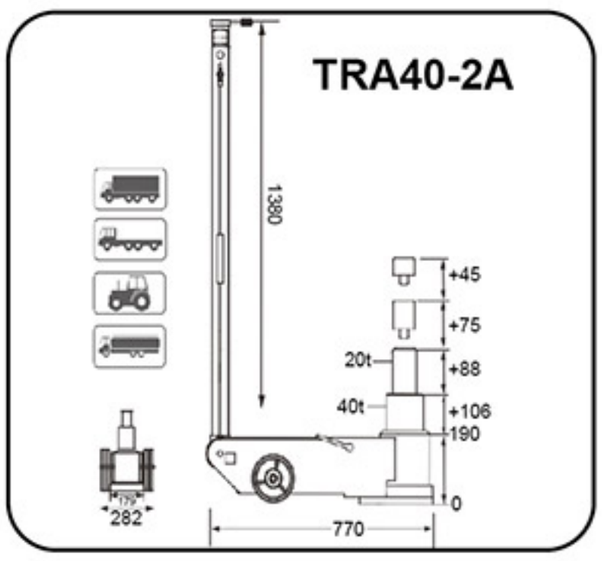

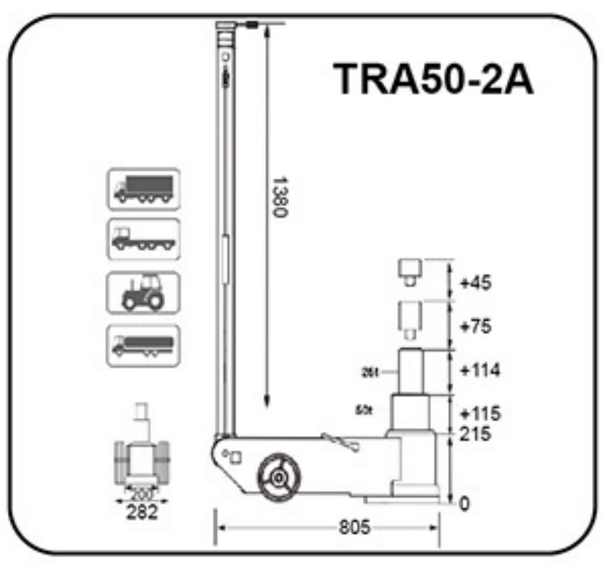

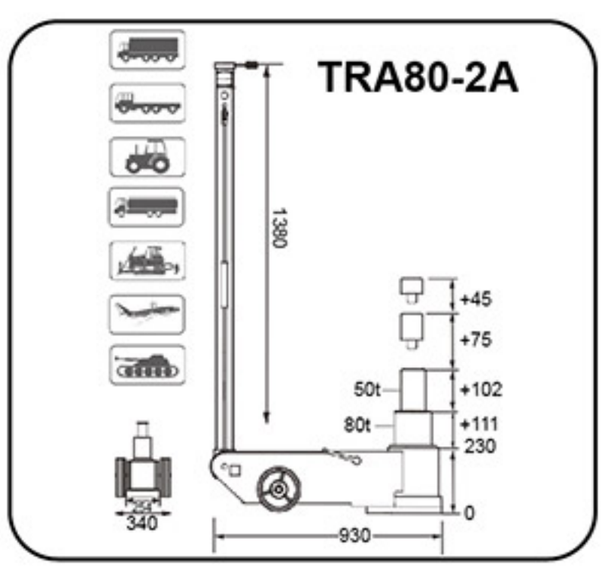

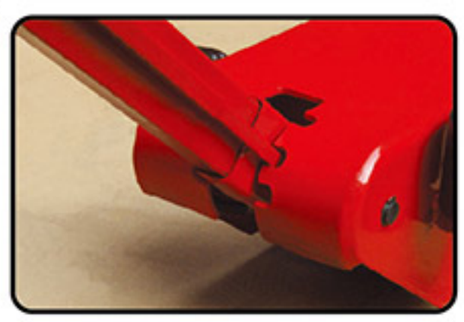

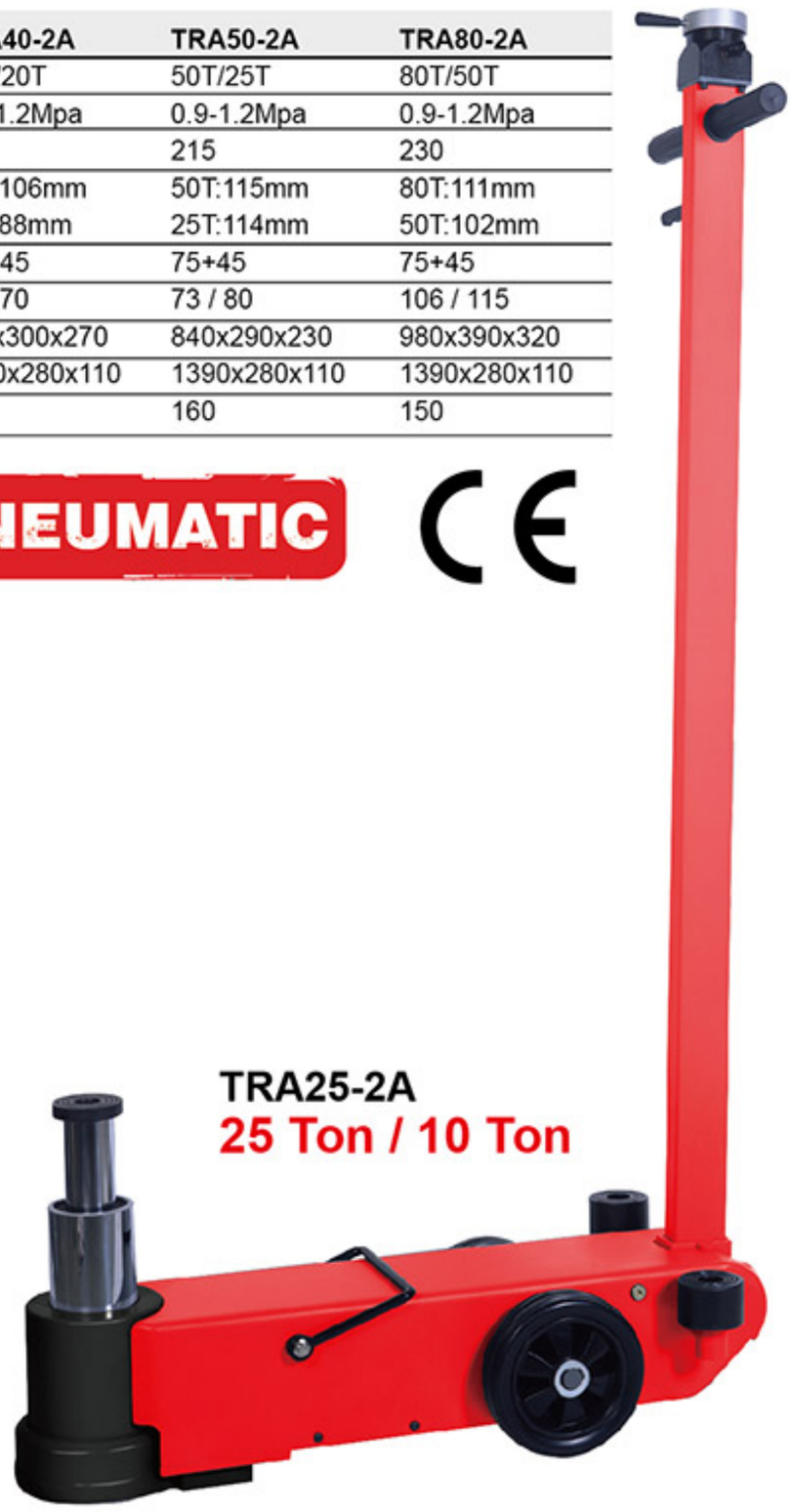

TRA25-2A
25 Ton / 10 Ton

TRA40-2A
40Ton / 20 Ton

TRA50-2A
50 Ton / 25 Ton

TRA80-2A
80 Ton / 50 Ton

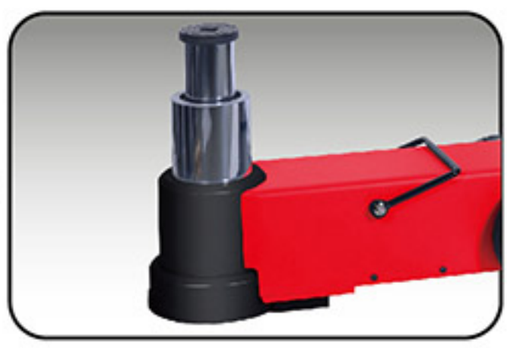

Chrome Plated Cylinder

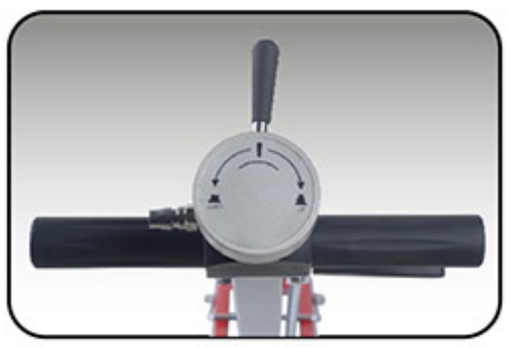

Release Safely

www.tongrunjacks.com

Pneumatic Jack

Model	TRA30-2AL / TRA40-2AL	TRA40-3AL	TRA50-3A	TRA60-3AL	TRA60-4A
Capacity	30T/15T 40T/20T	40T/20T/10T	50T/25T/10T	60T/40T/20T	60T/40T/22T/11T
Air Pressure	0.9-1.2Mpa	0.9-1.2Mpa	0.9-1.2Mpa	0.9-1.2Mpa	0.9-1.2Mpa
Min. Height (mm)	170 / 170	125	160	150	150
Lifting Height	30T:86mm 40T:88mm 15T:83mm 20T:81mm	40T:57mm 20T:49mm 10T:53mm	50T:62mm 25T:61mm 10T:69mm	60T:57mm 40T:59mm 20T:61mm	60T:57mm 40T:60mm 22T:61mm 11T:65mm
Extension Height (mm)	75+45	75+45	75+45	75+45	75+45
N.W. / G.W. (kg)	53 / 56	44 / 50	57 / 60	64 / 67	62 / 65
Package Size (mm)	620x300x250	870x330x220	890x290x230	1000x300x240	1000x300x240
Handle Box (mm)	1390x280x110	1390x280x110	1390x280x110	1390x280x110	1390x280x110
QTY / 20'CY (PCS)	190	160	160	160	160

PROFESSIONAL **PNEUMATIC**

TRA30-2AL 30Ton / 15Ton
TRA40-2AL 40Ton / 20Ton

TRA40-3AL
40 / 20 / 10Ton

TRA50-3A
50 / 25 / 10 Ton

TRA60-3AL
60 / 40 / 20 Ton

TRA60-4A
60 / 40 / 22 / 11 Ton

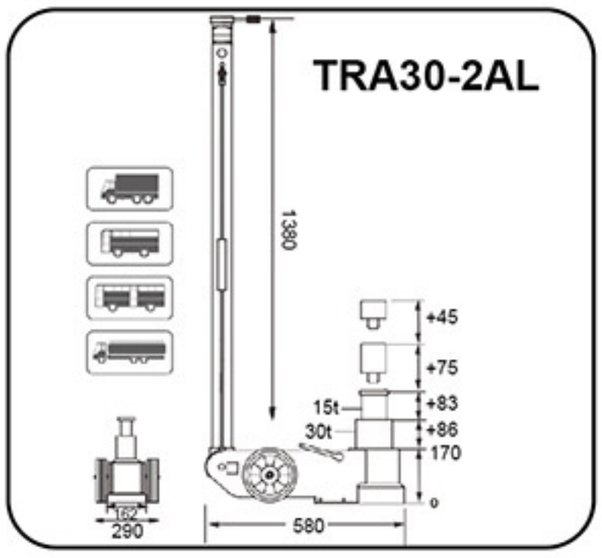

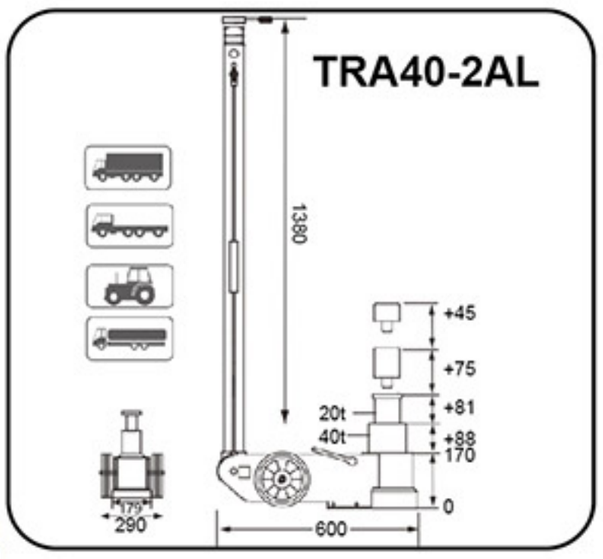

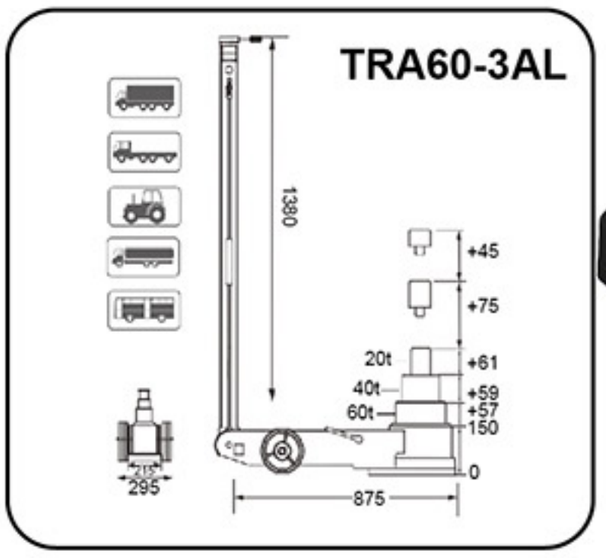

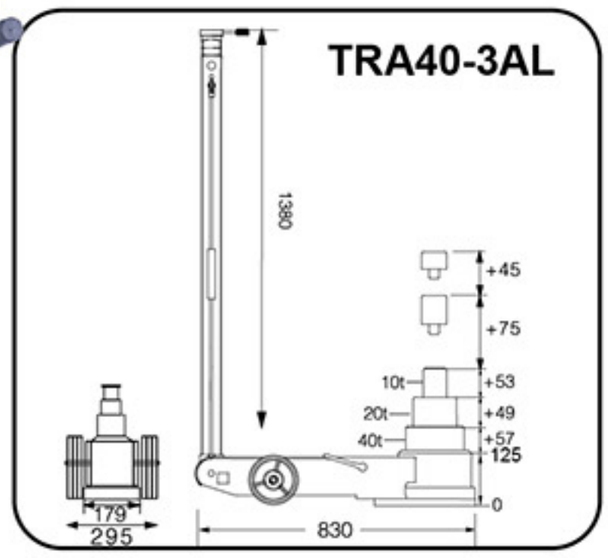

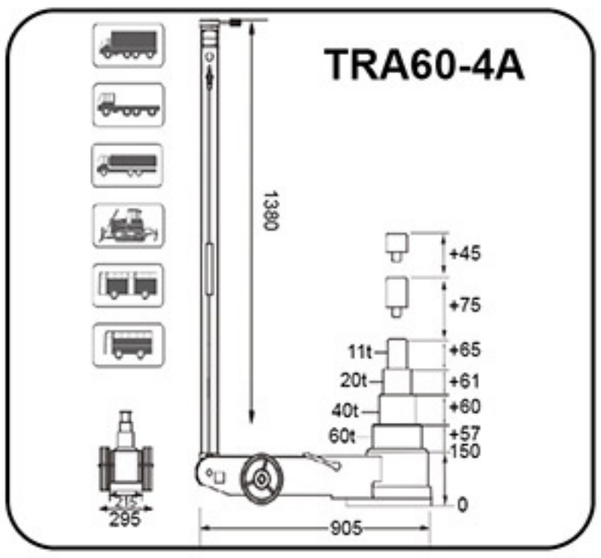

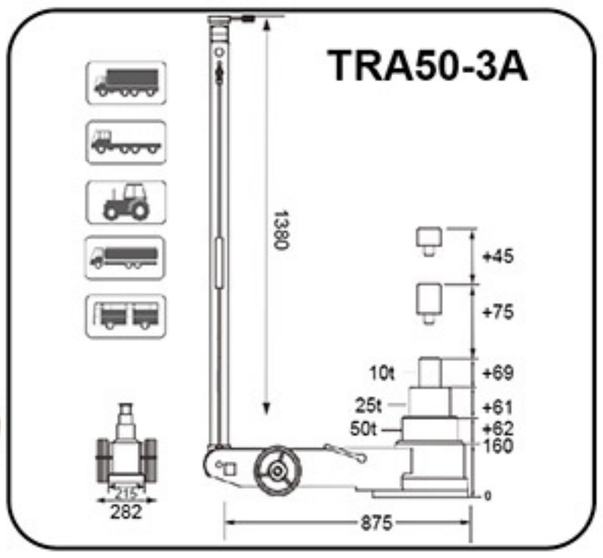

CE

www.tongrunjacks.com

Pneumatic Jack (For Common)

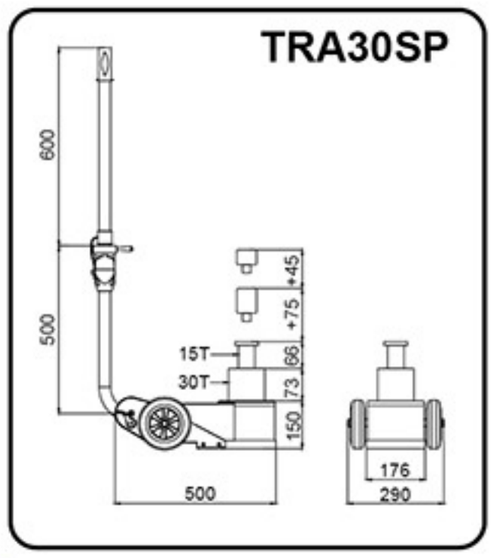

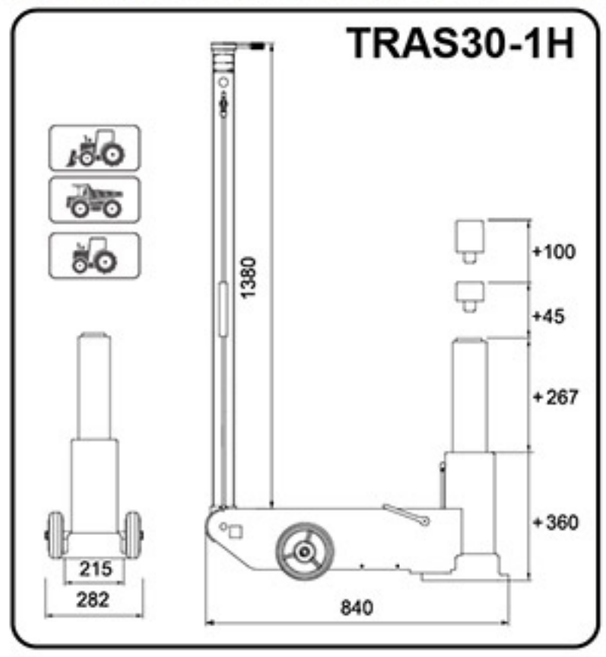

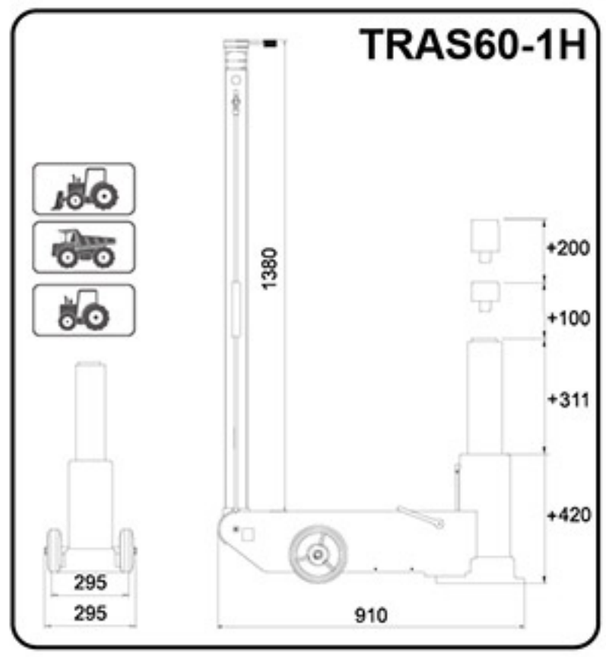

TRA30SP
30 Ton / 15 Ton

TRAS30-1H **TRAS60-1H**
30 Ton **60 Ton**

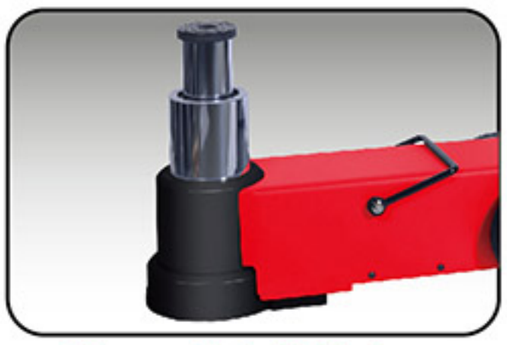

Chrome Plated Cylinder

PROFESSIONAL
PNEUMATIC

CE

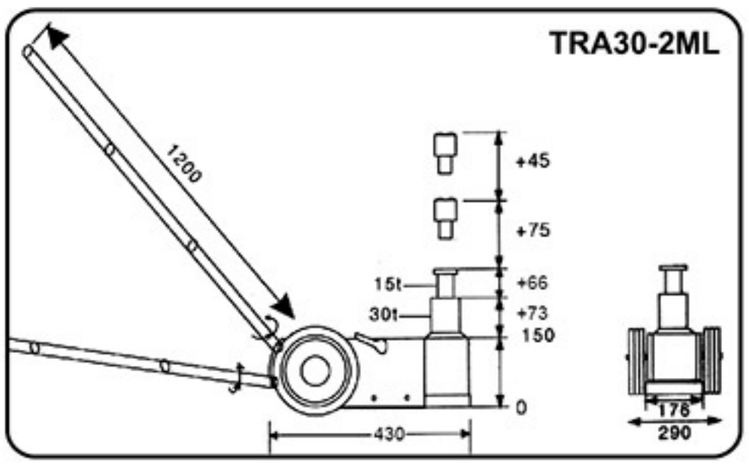

TRA30-2ML
30 Ton / 15 Ton

Model	TRA30SP	TRAS30-1H TRAS60-1H	TRA30-2ML
Capacity	30Ton / 15Ton	30Ton / 60Ton	30Ton / 15Ton
Air Pressure	0.9-1.2Mpa	0.9-1.2Mpa	0.9-1.2Mpa
Min. Height (mm)	150	360/420	150
Lifting Height	30T:73mm 15T:66mm	30T:267mm / 60T:311mm	30T:73mm 15T:66mm
Extension Height (mm)	75+45	100+45 / 100+200	75+45
N.W. / G.W. (kg)	24 / 30	87 / 126	30 / 35
Package Size (mm)	700x290x270	940x380x520 / 935x325x460	500x280x210
Handle Box (mm)	/	/	/
QTY / 20'CY (PCS)	250	140	240

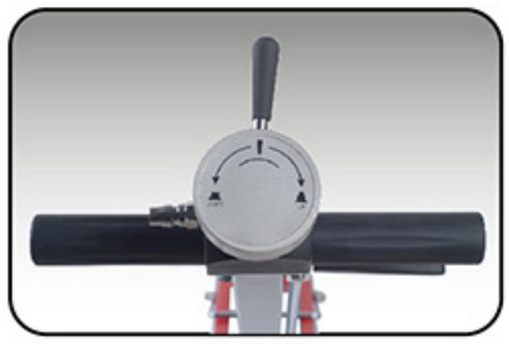

Release Safely

Pneumatic Jack

TRA22-1
22 Ton

NEW PRODUCT

3000+times
Lifty cycles

TQ22001
22 Ton

TQ35001
(TRA1350)
35 Ton

Model	Capacity	Min. Height (mm)	Max. Height (mm)	Ram Lift (mm)	Screw Extend (mm)	Air Pressure (Mpa)	N.W. / G.W. (kg)	Package Size (mm)	QTY/20'CY (PCS)
TQ22001	22 Ton	220	435	110	105	0.7 ~ 1.2	45 / 47	675x390x260	352
TRA22-1	22 Ton	215	456	141	78	0.9 ~ 1.2	40 / 45	590x300x290	330
TQ35001 (TRA1350)	35 Ton	250	495	130	115	0.7 ~ 1.2	46 / 48	675x390x260	350

Hydraulic Portable Body Repair Kits

Model	TRA0204-1
Capacity	20 Ton
Lifting Height (mm)	125
Min. Ram Height (mm)	278
Package Size (mm)	Fig.1# 760x330x260 Fig.2# 690x400x130
N.W. / G.W. (kg)	Fig.1# 25.5 / 33 Fig.2# 26.5 / 34
QTY / 20'CY (PCS)	280

TRA0204-1
20 Ton

Metal Case

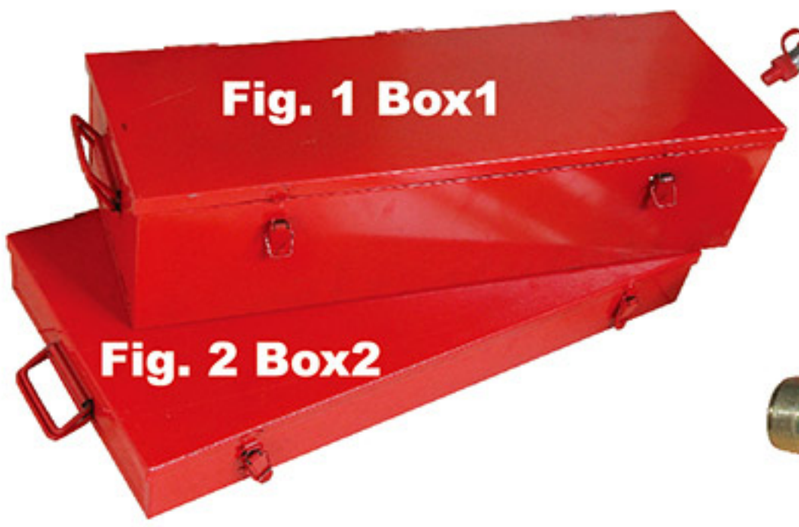

Hydraulic Portable Body Repair Kits

T70401
T70401S
4 Ton

T71002
T71002S
T71002L
10 Ton

T71003L
10 Ton

NEW PRODUCT

T71005S
T71005L
10 Ton

Fig.1
Metal Case

Fig.2
Blow Mold Case

Model	Capacity	Min. Ram Hight (mm)	Ram Lifting Hight (mm)	N.W. (kg)	G.W. (kg)	Package Size (mm)	QTY/20'CY (PCS)
T70401	4 Ton	270	120	17	21	Fig.1# 590x250x190 (Metal Box)	800
T70401S	4 Ton	270	120	17	20	Fig.2# 585x355x175 (Blow Mold Case)	702
T71002	10 Ton	380	150	28.5	35.5	800x315x180	442
T71002S	10 Ton	380	150	28.5	35.5	720x375x175	420
T71002L	10 Ton	380	150	28.5	35	990x440x220	270
T71003L	10 Ton	380	150	28.5	35	990x440x220	270
T71005S	10 Ton	322	130	24.7	28	740x400x185	500
T71005L	10 Ton	322	130	24.7	29.5	860x415x190	410

Hydraulic Ram

CE

TRB2005
5 Ton

TRB2010
10 Ton

TRB2020
20 Ton

TRB2030
30 Ton

TRB2050
50 Ton

TRB2100
100 Ton

TRB2150
150 Ton

TRB2200
200 Ton

Model	Capacity (Ton)	Min.Height (mm)	Lifting Height (mm)	Max. Height (mm)	Cylinder Diameter (mm)	N.W. / G.W. (kg/pc)	PCS / CTN	Package Size (mm)	Suitable Hand Pump	Qty/20'CY (PCS)
TRB2005	5	41	7	48	35	0.8/0.9	18	390x180x90	TRCP-180	22000
TRB2010	10	53	11	64	44	1.8/1.9	8	320x170x150		10500
TRB2020	20	62	13	75	64	3.1/3.2	6	310x185x170		6200
TRB2030	30	66	14	80	78	5/5.2	1	205x150x105		3800
TRB2050	50	77	18	95	98	8.5/8.8	1	230x165x110	TRCP-700	2200
TRB2100	100	93	21	114	135	19/19.5	1	295x210x130		1020
TRB2150	150	88	21	109	166	20/21.7	1	300x295x175		920
TRB2200	200	101	21	122	195	34/35.9	1	260x255x150		550

Hydraulic Multi-Stage Ram

CE

NEW PRODUCT

TRB3010
10 Ton

TRB3020
20 Ton

TRB3030
30 Ton

TRB3050
50 Ton

TRB3100
100 Ton

Model	Capacity (Ton)	Stage	Capacity (Ton)	Lifting Height per Stage (mm)	Total Lifting Height (mm)	Min. Height (mm)	Max. Height (mm)	Cylinder Diameter (mm)	N.W. / G.W. (kg/pc)	PCS / CTN	Package Size (mm)	Suitable Hand Pump	Qty/20' CY(PCS)
TRB3010	10	2	5	15	25	49	74	30	1.5/1.6	8	300x150x120	TRCP-180	12500
		1	10	10				45					
TRB3020	20	2	7	16	27	57	84	35	2.5/2.7	6	195x165x140		7400
		1	20	11				60					
TRB3030	30	3	5	20	54	64	118	30	4.4/4.7	1	205x150x105	TRCP-700	4200
		2	15	22				50					
		1	30	12				75					
TRB3050	50	3	5	25	66	74	140	30	7/7.9	1	230x165x110		2500
		2	15	26				50					
		1	50	15				95					
TRB3100	100	3	12	24	69	93	162	45	15.5/16.9	1	295x210x130		1180
		2	35	30				75					
		1	100	15				135					

Hydraulic hand pump

TRCP180

TRCP700

Model	Working Pressure (Bar)		Oil volume/each pump (ml)		O il capacity (ml)	M.W./G.W. (kg)	Package Size (mm)	Qty/20'CY (PCS)
	Low Pressure	High Pressure	Low Pressure	High Pressure				
TRCP-180	-	700	-	2	400	3.9/4.5	395x225x165	1970
TRCP-700	20	700	13	2.3	900	9.3/10.2	700x190x195	1250

Hand Operated Pump

T71001B1
10 Ton

Complies with
ASME
Safety Standards

T70401B1
4 Ton

Model	Oil Capacity (ml)	N.W. / G.W. (kg)	Package Size (mm)	QTY/20'CY (PCS)
T70401B1	280	6.2 / 6.7	555x170x180	1584
T71001B1	500	7.2 / 7.7	695x170x180	1248

Pull-back Ram

TRK1220
20 Ton

TRK1210
10 Ton

TRK1205
5 Ton

TRK1202
2 Ton

Model	Capacity	PCS /CTN	Max. Length (mm)	Storke (mm)	N.W. / G.W. Kgs / CTN	Package Size (mm)	QTY/20'CY (PCS)
TRK1202	2 Ton	6	575	120	22 / 24	600x290x230	4200
TRK1205	5 Ton	6	665	130	33 / 35	690x290x230	4000
TRK1210	10 Ton	4	715	130	32 / 34	680x340x210	2000
TRK1220	20 Ton	1	980	200	20 / 21	930x205x135	850

Air Hydraulic Foot Pump

CE PROFESSIONAL

NEW PRODUCT

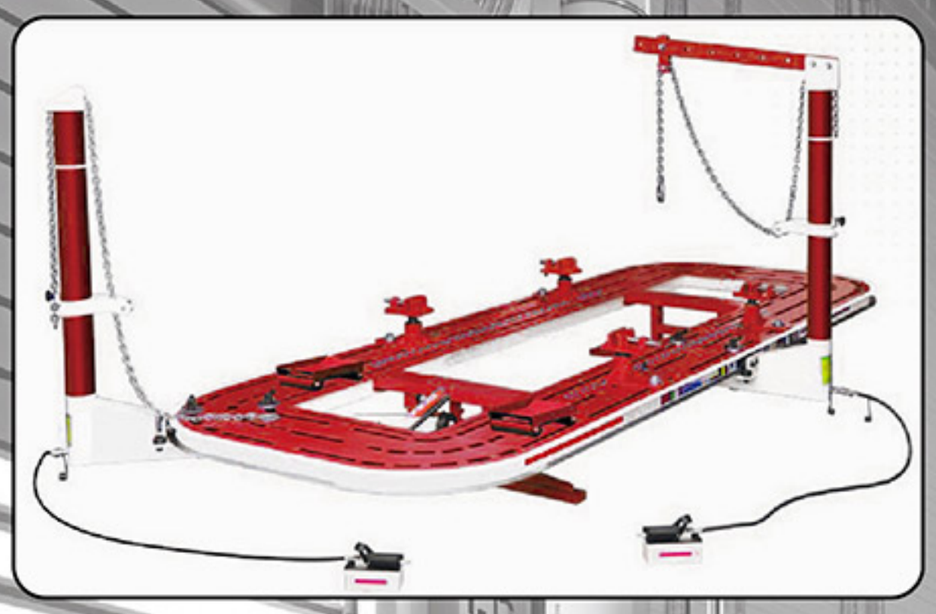

TRA3401

TRA5200

TRA5201

TRA5300

TRA5301

Model	TRA3401	TRA5200	TRA5201	TRA5300	TRA5301
Working pressure (Mpa)	0.75-0.85	0.6-1.0	0.6-1.0	0.6-1.0	0.6-1.0
Max hydraulic pressure (Mpa)	70	70	70	70	70
Output flow(no load) (ml/min)	490	850	850	850	850
Output flow(loaded) (ml/min)	130	170	170	170	170
Reservoir material	Steel	Aluminum	Plastic	Steel	Plastic
Reservoir capacity (ml)	690	1700	1700	3200	3200
NW. / GW. (kg)	8 / 8.5	5.8 / 6.2	5.2 / 5.5	9.5 / 10	8.1 / 8.5
External dimension (mm)	368x170x190	265x128x190	265x138x190	320x190x190	332x190x190
Packing Dimensions (mm)	375x176x200	280x150x210	280x150x210	340x218x210	335x210x210

Scissor Jack

T10104
1 Ton

T10154
1.5 Ton

T10102-GS
1 Ton

T10152-GS
1.5 Ton

T10202-GS
2 Ton

T101010S
1 Ton

Hydraulic Pump

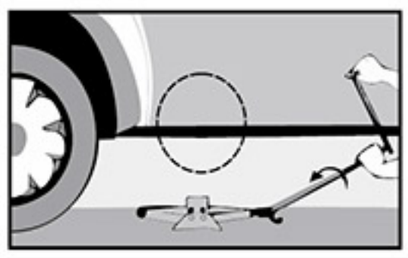

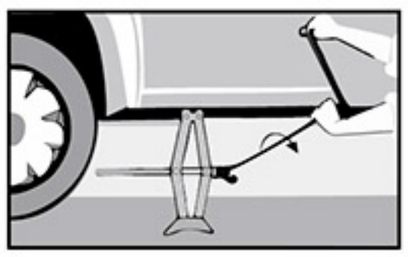

Optional Saddles Available.

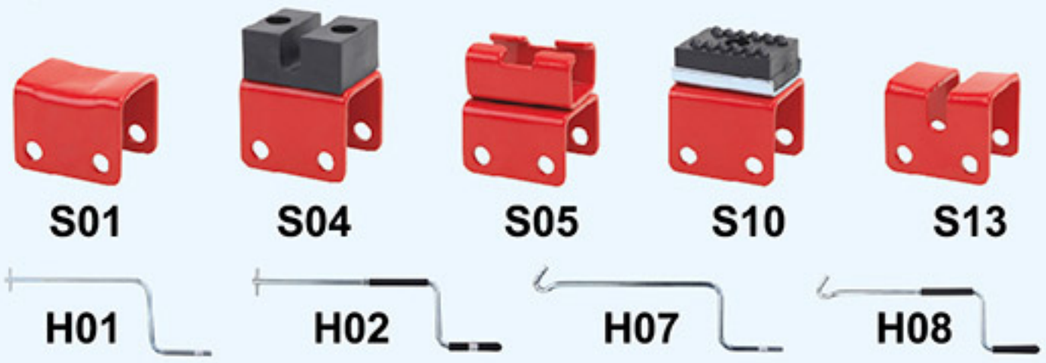

Model	Capacity	Min. Height (mm)	Max. Height (mm)	Total Length (mm)	Stroke With Rated load (mm)	N.W. / G.W. (kg)	Package Size (mm)	QTY/ CTN (PCS)	QTY/20'CY (PCS)
T10104	1 Ton	80	330	365	124	1.5/1.65	475x395x200	10	6000
T10154	1.5 Ton	100	370	415	135	2.15/2.3	505x405x240	10	5000
T10102-GS	1 Ton	88	380	426	200-370	2.5 / 2.8	500x455x255	10	4950
T10152-GS	1.5 Ton	95	390	450	230-390	3.3 / 3.5	660x470x230	10	3600
T10202-GS	2 Ton	120	395	450	260-390	3.5 / 4	660x470x260	10	4800
T101010S	1 Ton	138	355	380	/	6.78/7.88	428x320x205	2	2000

Industrial Toe Jack

TRJ7102
2 Ton

TRJ7105
5 Ton

TRJ7110
10 Ton

360° Rotating Handle

Head Support

Toe Support

Model	Toe Capacity	Head Capacity	Min. Toe Height (mm)	Max. Toe Height (mm)	Min. Head Height (mm)	Max. Head Height (mm)	Base Size (mm)	N.W. / G.W. (kg)	Package Size (mm)	QTY/20'CY (PCS)
TRJ7102	2 Ton	3 Ton	15.8	128.5	238	349	127x177.8	10/10.5	265x200x310	1900
TRJ7105	5 Ton	6 Ton	22.2	141.3	298.5	409.5	270x184	22.5/23	320x257x358	800
TRJ7110	10 Ton	14 Ton	28.6	173	333.4	460.4	285.8x241.3	33.5/34	365x298x395	450

TRJ7205
5 Ton

TRJ7210
10 Ton

TRJ7225
25 Ton

Model	Toe Capacity	Head Capacity	Min. Toe Height (mm)	Max. Toe Height (mm)	Min. Head Height (mm)	Max. Head Height (mm)	N.W. / G.W. (kg)	Package Size (mm)	QTY/20'CY (PCS)
TRJ7205	2 Ton	5 Ton	25	230	368	573	22.5/25	365x200x430	700
TRJ7210	5 Ton	10 Ton	30	260	420	650	32.5/35	380x225x485	500
TRJ7225	10 Ton	25 Ton	58	273	505	720	109 / 116	530x350x610	150

Ratchet Steel Jack

TRJ7310-5T
5 Ton

TRJ7310-10T
10 Ton

TRJ7310-16T
16 Ton

TRJ7310-20T
20 Ton

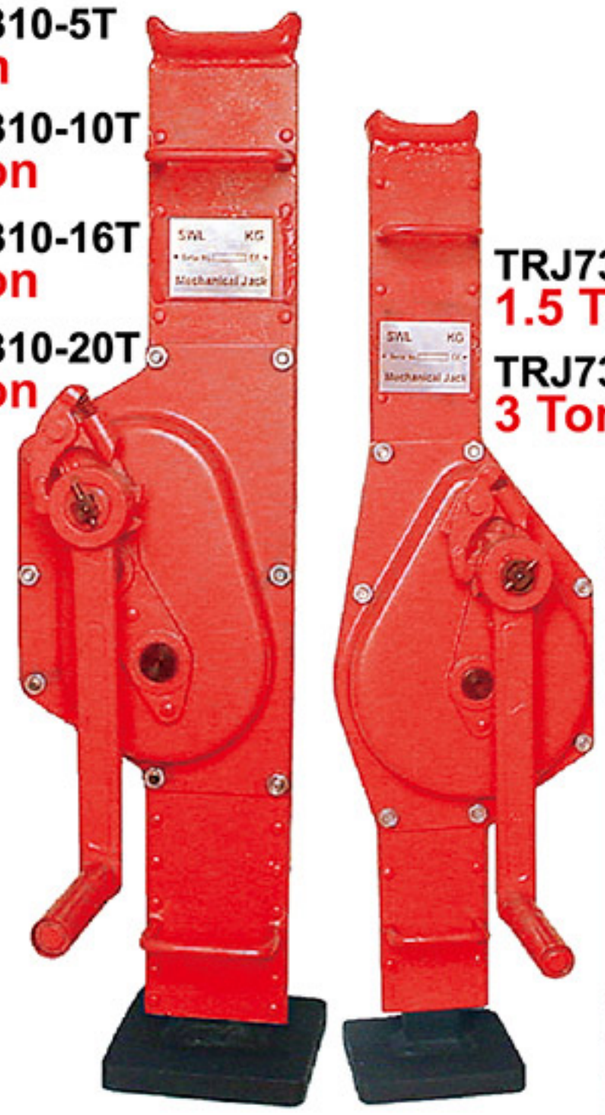

TRJ7310-1.5T
1.5 Ton

TRJ7310-3T
3 Ton

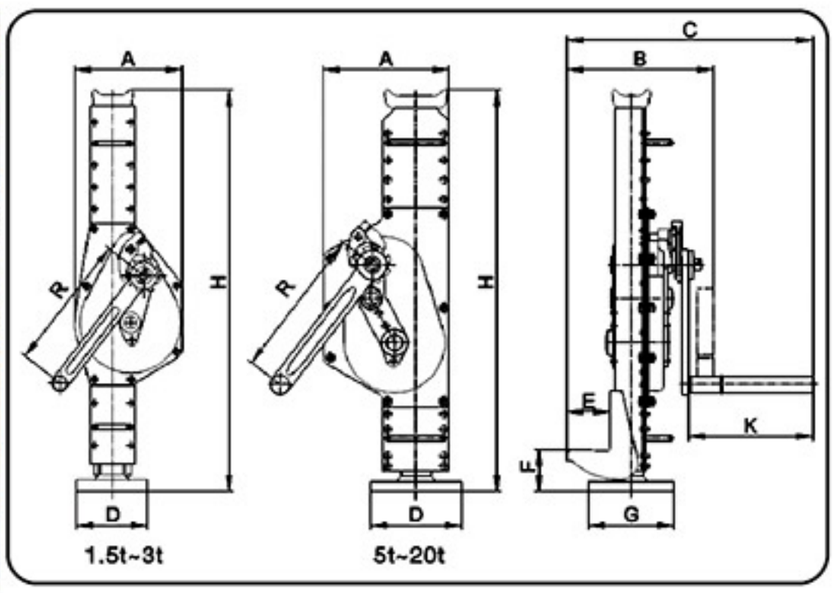

Model		TRJ7310-1.5T	TRJ7310-3T	TRJ7310-5T	TRJ7310-10T	TRJ7310-16T	TRJ7310-20T
Rated Capacity(Ton)		1.5	3	5	10	16	20
Stroke(mm)		300	350	350	410	320	320
Min. Height(mm)	F	60	70	80	85	95	100
Max. Height(mm)	H	600	730	730	800	800	860
Product Size(mm)	A	163	197	189	250	275	275
	B	190	200	239	293	320	335
	C	273	296	335	498	514	529
	D	100	130	140	140	150	150
	E	55	60	71	86	78	78
	G	110	140	170	170	180	180
	K	113	127	127	248	250	250
	R	225	250	275	300	300	380
N.W./G.W.(kg)		13.5 / 16	21.2 / 22	28.5 / 30	46.8 / 49	65 / 68	75 / 78
Package size(mm)		620x180x190	760x260x230	790x220x280	850X290X340	850x320x350	920x320x350
QTY/20'CY(PCS)		1100	743 PCS	534 PCS	310 PCS	273 PCS	230 PCS

Off-Road Jack

- Multi-functional tool is great for lifting tractors or heavy trucks, pulling posts and poles, and even serves as an all-purpose hoist or winch.

TRA8205
20”

TRA8335
33”

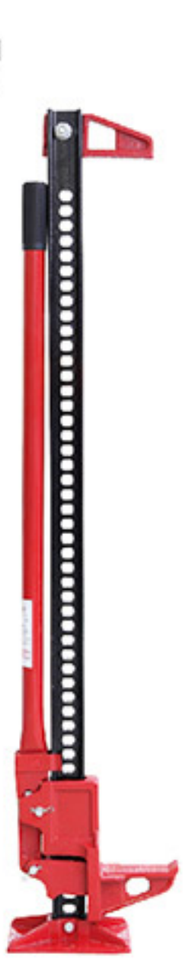

TRA8485
48”

TRA8605
60”

Model	TRA8205	TRA8335	TRA8485	TRA8605
Capacity	3 Ton	3 Ton	3 Ton	3 Ton
Base Size (mm)	177.8x114.3	177.8x114.3	177.8x117.4	177.8x117.4
Product Height (mm)	508	838.2	1219.2	1524
Min.Height (mm)	125	125	125	125
Max.Height (mm)	318	660	1020	1330
N.W. / G.W. (kg)	9 / 10	11 / 12	14 / 15	14.5 / 15.5
Package Size (mm)	540x280x145	870x280x145	1250x280x145	1550x280x145
QTY/20'CY (PCS)	1320	950	650	550

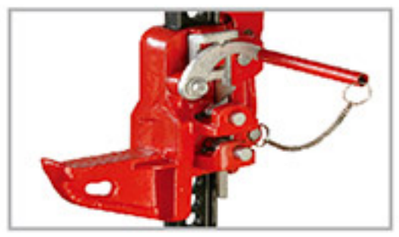

TRA8485(GS)
48”

TRA8605(GS)
60”

Model		TRA8485(GS)	TRA8605(GS)
Max. SupportLoad (kg)	130 mm ≤H<300 mm	2000 kgs	2000 kgs
	300 mm≤ H<500 mm	1600 kgs	1600 kgs
	H ≥ 500 mm	500 kgs	500 kgs
Lifting Range (mm)		130-1060	130-1325
Base Size (mm) (WxLxT)		260x120x5	260x120x5
N. W. / G.W. (kg)		13 / 14	14.5 / 15.5
Package Size (mm)		1255x250x145	1555x250x145
QTY/20'CY (PCS)		580	480

Air Jack

NEW PRODUCT

TRA2812
2 Ton

TRA2813
2 Ton

Model	TRA2812	TRA2813
Capacity	2 Ton	2 Ton
Min. Height(mm)	125	125
Max. Height(mm)	430	430
Lifting Time	6 sec	6 sec
Working Temp	-20°C ~ 50°C	-20°C ~ 50°C
N.W. / G.W. (kg)	14.2 / 15	16.3 / 17.5
Package Size (mm)	520x280x150	660x280x200
QTY/20'CY (PCS)	850	850

TRA3812
2 Ton

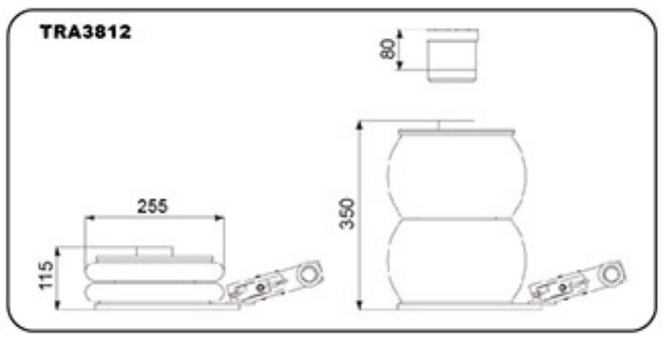

TRA1812
2 Ton

TRA3813
2 Ton

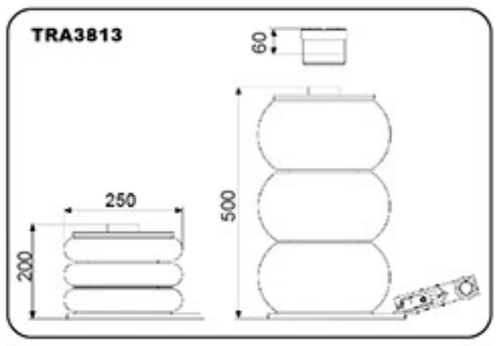

TRA1813
2 Ton

Model	TRA3812	TRA1812	TRA3813	TRA1813
Capacity	2 Ton	2 Ton	2 Ton	2 Ton
Min. Height(mm)	115	115	200	200
Max. Height(mm)	430	430	560	560
Lifting Time	3 sec	3 sec	4 sec	4 sec
Working Temp	-60°C ~ 50°C	-60°C ~ 50°C	-60°C ~ 50°C	-60°C ~ 50°C
N.W. / G.W. (kg)	15 / 16	18 / 19	16 / 17	19 / 20
Package Size (mm)	510x290x140	1300x280x140	490x280x230	1300x280x220
QTY/20'CY (PCS)	850	450	700	270

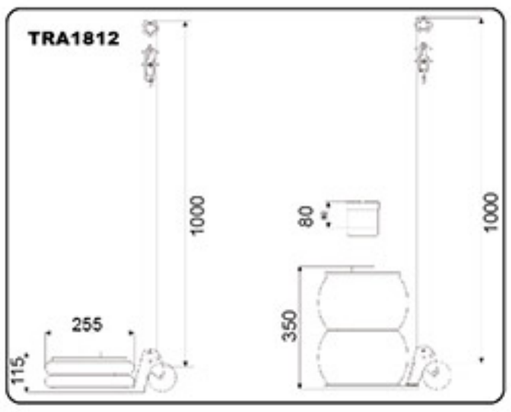

Wheel Chocks

TRF3553

Model	TRF3553
Product Size	105x85x90 mm
N.W. / G.W.	0.7 kgs/pair / 0.8 kgs/pair
Package Size	370x230x120 mm
QTY/CTN	10 pairs
QTY/20'CY	20000 pairs

Steel

One Piece

TRTS001

Model	TRTS001
Product Size	220x195x155mm
N.W. / G.W.	2.2 kgs / 2.45 kgs
Package Size	350x300x225mm
QTY/CTN	8 PCS
QTY/20'CY	9000 PCS

Rubber

Rubber Mat

TRF3553-1

Model	TRF3553-1
Product Size	105x85x90 mm
N.W. / G.W.	0.7 kgs/pair / 0.8 kgs/pair
Package Size	370x230x120 mm
QTY/CTN	10 pairs
QTY/20'CY	20000 pairs

Steel

One Piece

TRTS007

Model	TRTS007
Product Size	230x180x140 mm
N.W. / G.W.	3.5 kgs / 4 kgs
Package Size	500x360x180mm
QTY/CTN	6 PCS
QTY/20'CY	4500 PCS

Rubber

For SUV

TRF3554

Model	TRF3554
Product Size	152x125x52mm
N.W. / G.W.	0.91 kgs/pair 0.94 kgs/pair
Package Size	445x285x170mm
QTY/CTN	16 pairs
QTY/20'CY	21000 pairs
MOQ	160 pairs

Steel

One Piece

TRTS002

Model	TRTS002
Product Size	280x240x180mm
N.W. / G.W.	5.7 kgs / 6 kgs
Package Size	500x360x180mm
QTY/PLT	4 PCS
QTY/20'CY	3200 PCS

Rubber

For Truck

TRN37-2

Model	TRN37-2
Product Size	326x204x161 mm
N.W. / G.W.	4.8 kgs/pair / 5.3 kgs/pair
Package Size	370x240x170 mm
QTY/CTN	2 PCS
QTY/20'CY	2000 PCS

Steel

One Pair

TRF3301

Model	TRF3301
Product Size	129x106x78mm
N.W. / G.W.	0.66 kgs/pair / 0.96 kgs/pair
Package Size	450x175x115mm
QTY/CTN	10 pairs
QTY/20'CY	20000 pairs

Rubber

For Truck

TRF3555

Model	TRF3555
Product Size	230x220x12.5 mm
N.W. / G.W.	2.1 kgs/pair 2.2 kgs/pair
Package Size	295x233x260 mm
QTY/CTN	2 PCS
QTY/20'CY	2500 PCS

Steel

TRTS570

Model	TRTS570
Product Size	560x195x125mm
N.W. / G.W.	1.3 kgs / 1.5 kgs
Package Size	625x428x435mm
QTY/CTN	12 PCS
QTY/20'CY	2800 PCS

Plastic

Jack Stand

T42002
T42002X
2 Ton

T43002
3 Ton

T46002
6 Ton

T412002
12 Ton

- Ratchet style allows for fine adjustment and fast removal.
- Solid steel handle, Self-Locking ratchet
- Large saddle, unitized frame construction
- Ductile iron rack

Complies with ASME Safety Standards

Model	Capacity	Min. Height (mm)	Max. Height (mm)	N.W. / G.W. (kg)	Package Size (mm)	QTY/20'CY
T42002	2 Ton	275	420	4.8 / 5.2	201x180x345	2088 pairs
T42002X	2 Ton	250	380	4.5 / 4.7	200x160x315	2740 pairs
T43002	3 Ton	285	425	6.3 / 6.78	216x190x355	1900 pairs
T46002	6 Ton	393	593	13 / 13.8	305x255x460	880 pairs
T412002	12 Ton	465	715	28 / 29.6	340x300x550	620 pairs

T42001
2 Ton

T43001
3 Ton

T46001
6 Ton

T410001
10 Ton

Large foot base for stalility

Model	Capacity	Min. Height (mm)	Max. Height (mm)	N.W. / G.W. (kg)	Package Size (mm)	QTY/20'CY
T42001	2 Ton	268	418	4.8 / 5.26	210x195x355	1800 pairs
T43001	3 Ton	276	420	6.4 / 6.9	225x205x365	1650 pairs
T46001	6 Ton	388	580	13.6 / 14.3	305x265x460	735 pairs
T410001	10 Ton	455	705	27.8 / 29	340x310x570	448 pairs

Double Locking Jack Stand

Complies with ASME Safety Standards

T42002C
2 Ton

T43002C
3 Ton

T46002C
6 Ton

T412002C
12 Ton

Double Locking Ratchet Action

Model	Capacity	Min. Height (mm)	Max. Height (mm)	N.W. / G.W. (kg)	Package Size (mm)	QTY/20'CY
T42002C	2 Ton	275	420	4.8 / 5.2	201x180x345	2088 pairs
T43002C	3 Ton	285	425	6.3 / 6.78	216x190x355	1944 pairs
T46002	6 Ton	393	593	13 / 13.8	305x255x460	880 pairs
T412002C	12 Ton	465	715	28 / 29.6	340x300x550	620 pairs

T42001C
2 Ton

Double Locking Ratchet Action

Large foot base for stalility

T43001C
3 Ton

T46001C
6 Ton

T410001C
10 Ton

Model	Capacity	Min. Height (mm)	Max. Height (mm)	N.W. / G.W. (kg)	Package Size (mm)	QTY/20'CY
T42001C	2 Ton	268	418	4.8 / 5.26	210x195x355	1800 pairs
T43001C	3 Ton	276	420	6.4 / 6.9	225x205x360	1650 pairs
T46001C	6 Ton	388	580	13.6 / 14.3	305x265x460	735 pairs
T410001C	10 Ton	455	705	27.8 / 29	340x310x570	448 pairs

Foldable Jack Stand

T42004
2 Ton

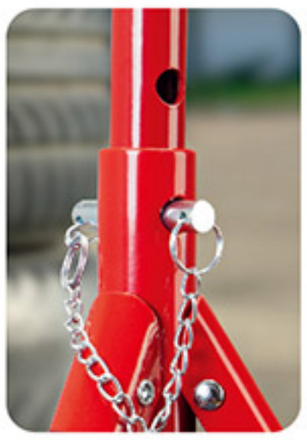

T43004
3 Ton

Model	T42004	T43004
Capacity	2 Ton	3 Ton
Min. Height (mm)	278	286
Max. Height (mm)	366	401
N.W. / G.W. (kg)	3.38 / 3.58	3.88/ 4.11
Package Size (mm)	530x280x315	630x300x320
QTY / CTN	10 pairs	10 pairs
QTY / 20'CY	4730 pairs	4080 pairs

Foldable Screw Jack Stand

HEAVY DUTY

TRF3201
12 Ton

TRF3202
12 Ton

Adjustable
Screw Height

Model	TRF3202	TRF3201
Capacity	12 Ton	12 Ton
Min. Height (mm)	710	456
Max. Height (mm)	1065	710
N.W. / G.W. (kg)	25 / 26.5	18.5 / 19.5
Package Size (mm)	210x410x880	210x410x610
QTY / 20'CY (PCS)	480	480

Welded Tripod Jack Stand

T41007-GS
2 Ton/pair
Conforms to BS AU
223a:2006

T41507G-GS
3 Ton/pair
Conforms to BS AU
223a:2006

T41507BS
3 Ton/pair
Conforms to BS AU
223a:2006

T43007G-GS
3 Ton

Model	T41007-GS	T41507G-GS
Capacity	2 Ton/pair	3 Ton/pair
Min. Height (mm)	291	322
Max. Height (mm)	391	490
N.W. / G.W. (kg)	3.5 / 3.9	4.6 / 5
Package Size (mm)	310x230x265	380x300x312
QTY / 20'CY (PCS)	1400 pairs	880 pairs

Model	T41507BS	T43007G-GS
Capacity	3 Ton/pair	3 Ton
Min. Height (mm)	270	324
Max. Height (mm)	360	492
N.W. / G.W. (kg)	3.6 / 4.1	4.7 / 5.2
Package Size (mm)	310x235x270	420x310x360
QTY / 20'CY (PCS)	1440 pairs	594 pairs

Welding Jack Stand

TRF30151-1
1.5 Ton

Large foot base for stalility

TRF30301-1
3 Ton

TRF30502-1
5 Ton

Large foot base for stalility

Model	Capacity	Min. Height (mm)	Max. Height (mm)	N.W. / G.W. (Piece) (kg)	Package Size (mm)	QTY/CTN (PCS)	QTY/20'CY (PCS)
TRF30151-1	1.5 Ton	300	425	2 / 2.5	830x520x300	6	1200
TRF30301-1	3 Ton	345	525	4.2 / 4.5	950x720x380	6	600
TRF30502-1	5 Ton	390	660	9 / 12	570x570x580	1	300

Heavy-Duty Jack Stand

- Sturdy welded steel construction for superior safety and strength.
- Heavy gauge steel frame help prevent distortion or twisting.
- Pin design support column adjusts to different height positions.
- Adjustment pin is secured to stand to prevent loss
- Handle for positioning and carrying.

PROFESSIONAL

Complies with ASME Safety Standards

NEW PRODUCT

TZ070005
7 Ton

TZ120005
12 Ton

TZ220005
22 Ton

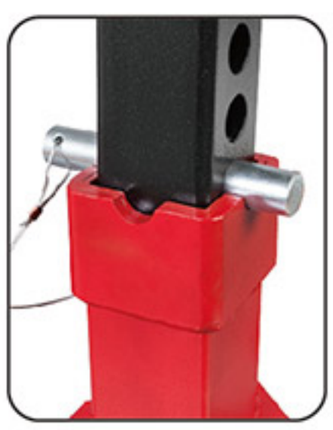

Model	TZ070005	TZ120005	TZ220005
Carrying Capacity	7 Ton	12 Ton	22 TON
Min. Height (mm)	235	300	325
Max. Height (mm)	395	460	500
N.W. / G.W. (kgs)	14.1 / 14.6	19.2 / 19.8	26.2 / 27
Saddle Size (mm)	75x90	75x90	75x90
Product Size (mm)	220x220x235	220x220x300	280x280x325
Package Size (mm)	330x270x220	340x270x250	390x315x290
QTY / CTN (PCS)	2	2	2
QTY / 20'CY (PCS)	1150	848	622

Heavy-Duty Vehicle Support Stand

PROFESSIONAL

NEW PRODUCT

TZ100001-GS
10 Ton (Short)

TZ100002-GS
10 Ton (Tall)

Model	TZ100001-GS	TZ100002-GS
Carrying Capacity	10 Ton	10 Ton
Min. Height (mm)	450	655
Max. Height (mm)	698	1087
N.W. / G.W. (kgs)	19.5 / 21.5	29.9 / 32.5
Product Size (mm)	330x330x468	460x460x673
Package Size (mm)	395x390x490	525x510x680
QTY / 20'CY (PCS)	280	132

TZ150001-GS
15 Ton (Short)

TZ150002-GS
15 Ton (Tall)

Model	TZ150001-GS	TZ150002-GS
Carrying Capacity	15 Ton	15 Ton
Min. Height (mm)	445	645
Max. Height (mm)	631	1077
N.W. / G.W. (kgs)	23.5 / 25.5	35.4 / 38
Product Size (mm)	330x330x463	460x460x663
Package Size (mm)	395x390x490	525x510x680
QTY / 20'CY (PCS)	280	132

TZ200011-GS
20 Ton (Short)

TZ200012-GS
20 Ton (Tall)

Model	TZ200011-GS	TZ200012-GS
Carrying Capacity	20 Ton	20 Ton
Min. Height (mm)	410	665
Max. Height (mm)	600	1090
N.W. / G.W. (kgs)	26.1 / 28.1	39.1 / 41.7
Product Size (mm)	330x330x428	460x460x683
Package Size (mm)	395x390x510	520x520x720
QTY / 20'CY (PCS)	280	132

TZ250001-GS
25 Ton (Short)

TZ250002-GS
25 Ton (Tall)

Model	TZ250001-GS	TZ250002-GS
Carrying Capacity	25 Ton	25 Ton
Min. Height (mm)	415	680
Max. Height (mm)	539	968
N.W. / G.W. (kgs)	24.4 / 26.4	38.5 / 41.1
Product Size (mm)	330x330x433	460x460x698
Package Size (mm)	395x390x455	520x510x720
QTY / 20'CY (PCS)	350	132

Heavy-Duty Vehicle Support Stand

PROFESSIONAL

NEW PRODUCT

Model:	TRF41009G
Capacity:	10 TON
Min. Height (mm)	720
Max. Height (mm)	1190
N.W. / G.W. (kgs)	23.5 / 26.38
Package Size(mm)	450x450x880
QTY/20'CY (PCS)	155

TRF41009G
10 Ton

TZ080003
8 Ton

TZ250021
25 Ton

Hydraulic Lifting

TZ100003
10 Ton

Rolling Move

Model	TZ080003	TZ100003	TZ250021
Carrying Capacity	8 Ton	10 Ton	25 TON
Min. Height (mm)	1400	1400	575
Max. Height (mm)	2040	2040	860
N.W. / G.W. (kgs)	49.5 / 50.5	54 / 55	78.5 / 97.5
Package Size (mm)	890x815x1400	875x812x1400	840x750x710
QTY / 20'CY (PCS)	40	40	42

Underhoist Stand

TRF42008
2 Ton

TRF42009
2 Ton

TRF40753A
0.75 Ton

TRF40753
0.75 Ton

Model	Capacity	Min. Height (mm)	Max. Height (mm)	N.W. / G.W. (kg)	Package Size (mm)	QTY/20'CY (PCS)
TRF42008	2 Ton	1730	1950	16 / 17.5	1600x190x120	780
TRF42009	2 Ton	1240	2145	17.5 / 18.5	1180x198x55	840
TRF40753	0.75 Ton	1360	2030	14.3 / 17.8	1410x370x65	580
TRF40753A	0.75 Ton	1360	2030	15.3 / 18.8	1410x370x65	580

Heavy-Duty Vehicle Support Stand

PROFESSIONAL

Model	TRF30703
Capacity	7 Ton
Min. Height (mm)	1295
Max. Height (mm)	1905
Base Diameter (mm)	711
N.W. / G.W. (kg)	65 / 68
Package Size (mm)	1130x370x320
QTY / 20'CY (PCS)	200

Model	TRF31203
Capacity	12 Ton
Min. Height (mm)	1295
Max. Height (mm)	1905
Base Diameter (mm)	711
N.W. / G.W. (kg)	78 / 81
Package Size (mm)	1120x450x390
QTY / 20'CY (PCS)	140

TRF30703
7 Ton

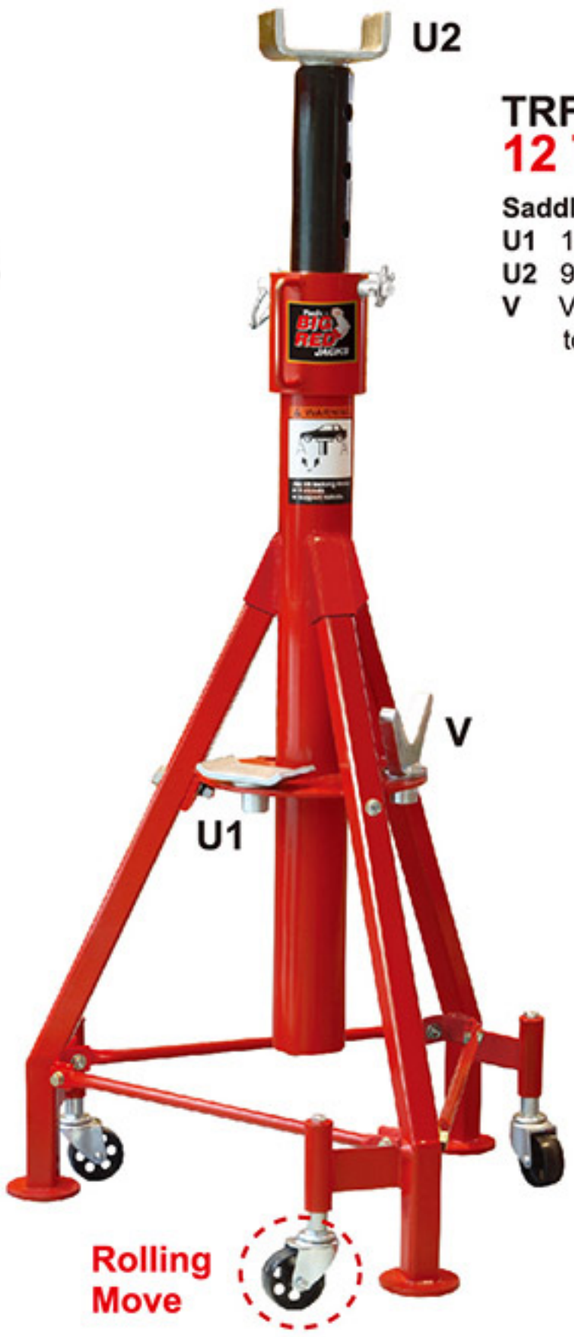

TRF31203
12 Ton

Saddle Type

U1 120mm Square Head
U2 92mm Square Head
V V Head Handles Up to φ 152mm

Engine Stand

T23401
750 LBS

T24541
1000 LBS
CE

T25671
1250 LBS
CE

Foldable

T26801
1500 LBS
CE

Model:	TR29008
Capacity:	2000 LBS
N.W.	42 kgs
G.W.:	44 kgs
Package Size:	840x300x230 mm
QTY/20'CY:	510 PCS

TR29008
2000 LBS

Model:	T23401	T24541
Capacity:	750 LBS	1000 LBS
Product Size	890x780x850 mm	925x780x850 mm
N.W.	18.5 kgs	21 kgs
G.W.:	19.6 kgs	22.3 kgs
Package Size:	880x200x195 mm	870x200x195 mm
QTY/20'CY:	740 PCS	740 PCS

Model:	T25671	T26801
Capacity:	1250 LBS	1500 LBS
Product Size	995x705x960 mm	870x820x860 mm
N.W.	27.5 kgs	33.5 kgs
G.W.:	29.2 kgs	35.3 kgs
Package Size:	880x215x220 mm	860x420x165 mm
QTY/20'CY:	640 PCS	448 PCS

Engine Leveler

TRF20501
500 KGS

TRF2750
680 KGS

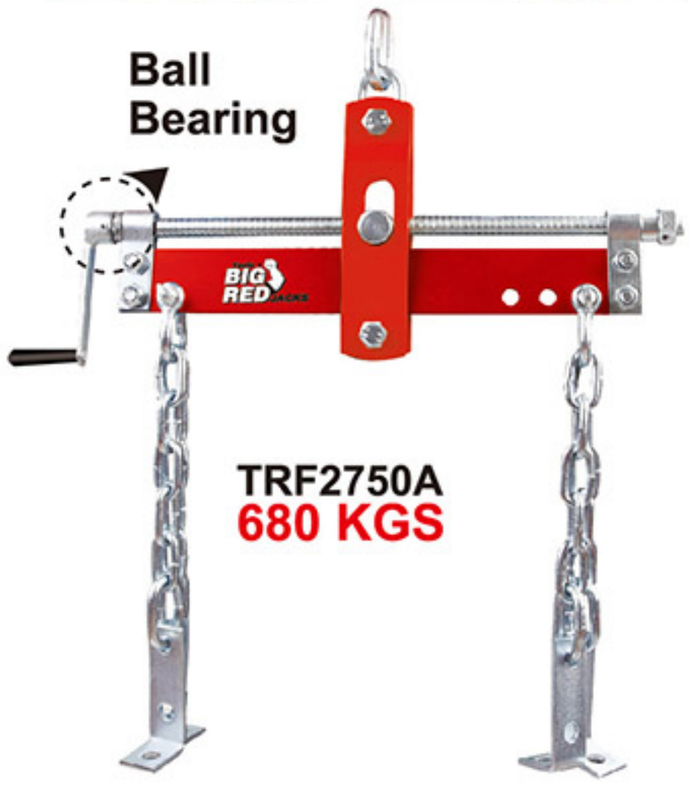

TRF2750A
680 KGS

TRF22001
2000 KGS

Model	TRF20501	TRF2750	TRF2750A	TRF22001
Capacity	500 kgs	680 kgs	680 kgs	2000 kgs
N.W. / G.W.	4.5 kgs / 4.8 kgs	5.2 kgs / 5.5 kgs	5.2 kgs / 5.5 kgs	5.4 kgs / 6 kgs
Package Size	700x370x260mm	480x280x220mm	480x280x220mm	600x290x270mm
QTY/CTN	4 PCS	4 PCS	4 PCS	4 PCS
QTY/20'CY	1950 PCS	2750 PCS	2750 PCS	2680 PCS

Long Ram Jack

NEW PRODUCT

TH30306 3 TON
TH30506 5 TON
TH30506X 5 TON

Welded

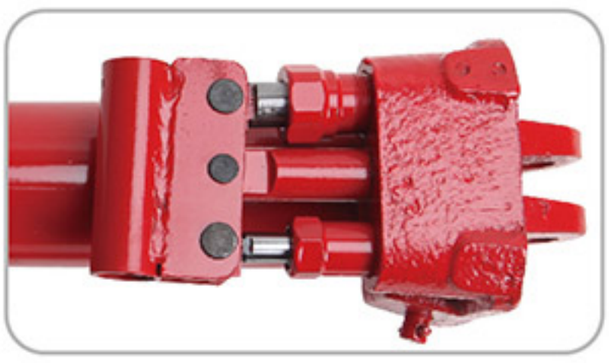

Double Pump

Quick Lifting with Dual Pistons

T30308 3 TON
T30508 5 TON
T30808 8 TON

Model	Capacity	Min. Height (mm)	Max. Height (mm)	N.W. / G.W. (kg)	Package Size (mm)	QTY/CTN (PCS)	QTY/20'CY (PCS)
TH30306	3 Ton	590	1085	11.38 / 11.88	610x160x130	2	1590
TH30506	5 Ton	590	1085	11.68 / 12.18	610x160x130	2	1590
TH30506X	5 Ton	560	1010	9.2 / 11.4	581x160x130	2	1690
T30308	3 Ton	630	1115	11.4 / 11.7	705x280x150	2	1680
T30508	5 Ton	635	1120	15 / 15.6	720x330x170	2	1326
T30808	8 Ton	635	1120	15 / 15.6	720x330x175	2	1326

Engine Crane

T31002CX
1 TON

Foldable

T31002CX-GS
1 TON

NEW PRODUCT

T32002CX
2 TON

T32002CX-GS
2 TON

T32002-GS
2 TON

Model:	T31002CX	T31002CX-GS	T32002CX	T32002CX-GS	T32002-GS
Capacity:	1 TON	1 TON	2TON	2TON	2 TON
Lifting Range:	75~1950 mm	160~2040 mm	25~2140mm	25~2240mm	25~2435 mm
Length:	1515 mm	1515 mm	1710mm	1710mm	1740 mm
Width:	1050 mm	1050 mm	1005mm	1005mm	1040 mm
Height:	1445 mm	1445 mm	1490mm	1490mm	1580 mm
Package Size:	1# 520x460x150 mm 2# 1440x380x200 mm	1445x455x180 mm	1#: 780x550x100 mm 2#: 1580x320x180 mm	1#: 780x550x100 mm 2#: 1580x320x180 mm	1# 890x600x100 mm 2# 1550x330x180 mm
N.W. / G.W.	1# 10 kgs / 11.8 kgs 2# 55 kgs / 58 kgs	65 / 69.8 kgs	1#: 22.66 kgs / 23.96 kgs 2#: 66.28 kgs / 69.1 kgs	1#: 22.66 kgs / 23.96 kgs 2#: 67.84 kgs / 70.66 kgs	1# 27.5 kgs / 29 kgs 2# 73.78 kgs / 75.92 kgs
QTY/20'CY	204 PCS	216 PCS	177PCS	177PCS	140 PCS

Low Profile Engine Crane

PROFESSIONAL

T31002DX
1 TON

Low Profile
100mm

Foldable

NEW PRODUCT

T32002D
2 TON

Low Profile
104mm

Nylon Wheel

Model:	T31002DX	T32002DX
Capacity:	1 TON	2 TON
Min. Lifting	25 mm	25 mm
Max. Lifting	1950 mm	2410 mm
Product Size:	1600x1075x1480 mm	1840x1050x1400 mm
Package Size:	1520x495x190mm	1# 860x570x90 mm 2# 1360x290x170 mm
N.W. / G.W.	71 kgs / 78.5 kgs	1# 22 kgs / 24 kgs 2# 80 kgs / 88 kgs
QTY/20'CY	168 PCS	195 PCS

Engine Crane

Foldable

TRA30502B
0.5 TON
TRA31002B
1 TON
TRA3202B
2 TON

Heavy Duty

TRA31003B
1 TON

Model:	TRA30502B	TRA31002B	TRA32002B	TRA31003B
Capacity:	0.5 TON	1 TON	2 TON	1 TON
Min.Height:	295	250	175	470 mm
Max. Height:	2170	2500	2550	2225 mm
N.W.	74	116	156	96.8
G.W.:	80	124	176	100.2
Package Size:	1470×520×930 mm (3 PCS)	1640×540×1070 mm (3 PCS)	1885×535×430 mm	1390×1030×1030 mm (5 PCS)
QTY/20'CY:	84 PCS	78 PCS	55 PCS	80 PCS
MOQ:	3 PCS	3 PCS	1 PC	5 PCS

Engine Support

TRW03001
0.3 TON

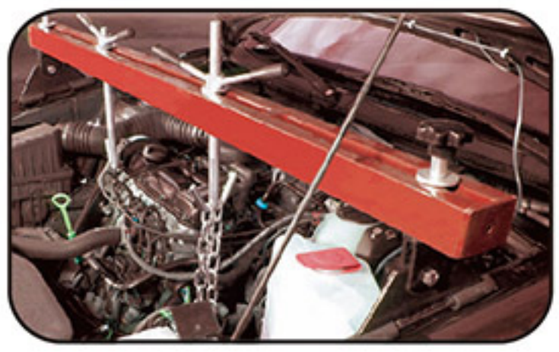

Model:	TRW03001
Capacity:	0.3 Ton
N.W.	16 kgs
G.W.:	18 kgs
Package Size:	1050x220x80 mm
Cross beam Length:	980 mm
QTY/20'CY:	972 PCS

TRW05001
0.5 TON

CE

Handle uses a manual threaded rod and features a double grooved chain

Enging Support Bar
Two Directions Enging Support

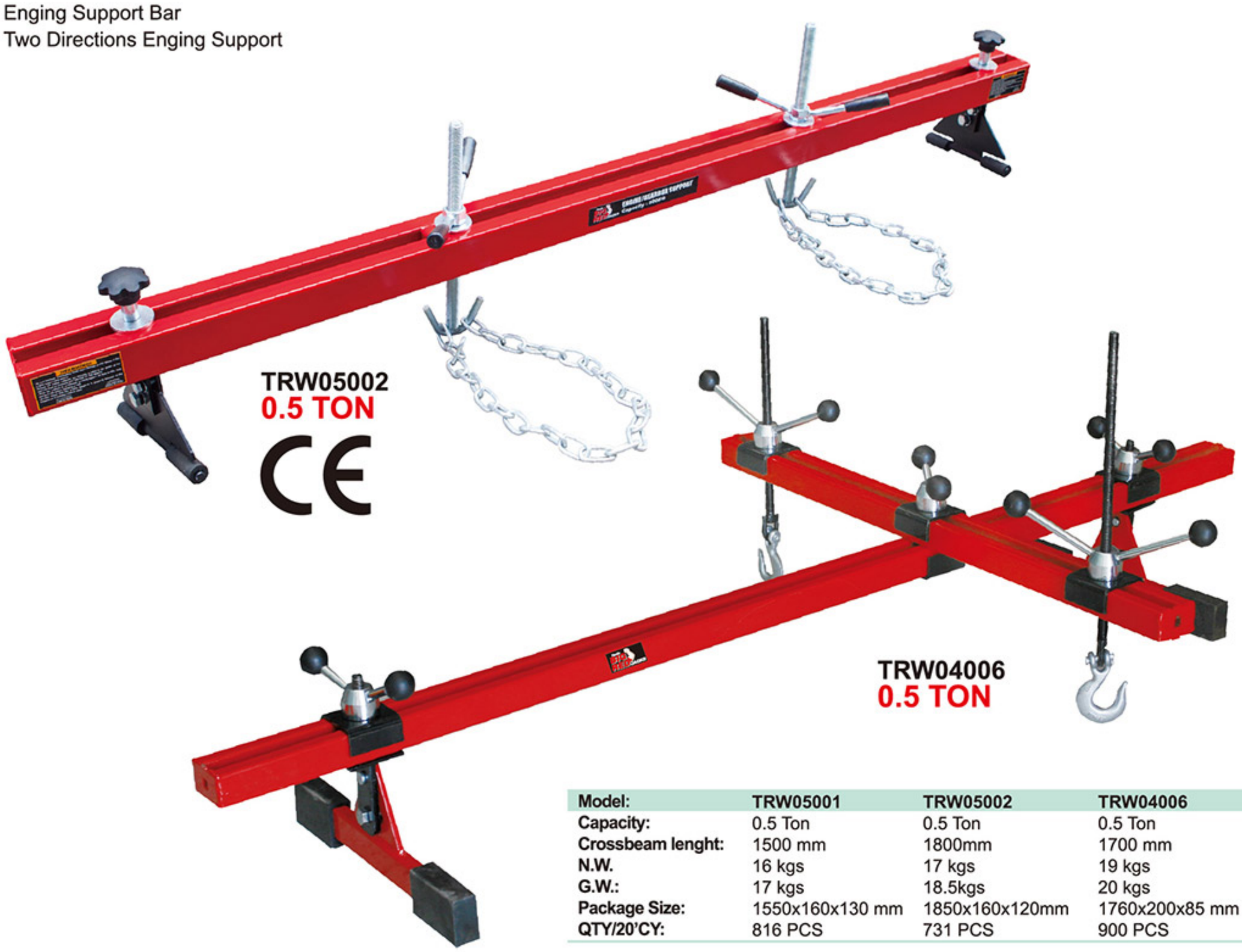

TRW05002
0.5 TON

CE

TRW04006
0.5 TON

Model:	TRW05001	TRW05002	TRW04006
Capacity:	0.5 Ton	0.5 Ton	0.5 Ton
Crossbeam lenght:	1500 mm	1800mm	1700 mm
N.W.	16 kgs	17 kgs	19 kgs
G.W.:	17 kgs	18.5kgs	20 kgs
Package Size:	1550x160x130 mm	1850x160x120mm	1760x200x85 mm
QTY/20'CY:	816 PCS	731 PCS	900 PCS

Hydraulic Shop Press

6 TON
395mm
120mm
Paper Carton

TY06001

12 TON
530mm
150mm
Paper Carton

TY12003

20 TON
640mm
150mm
Paper Carton

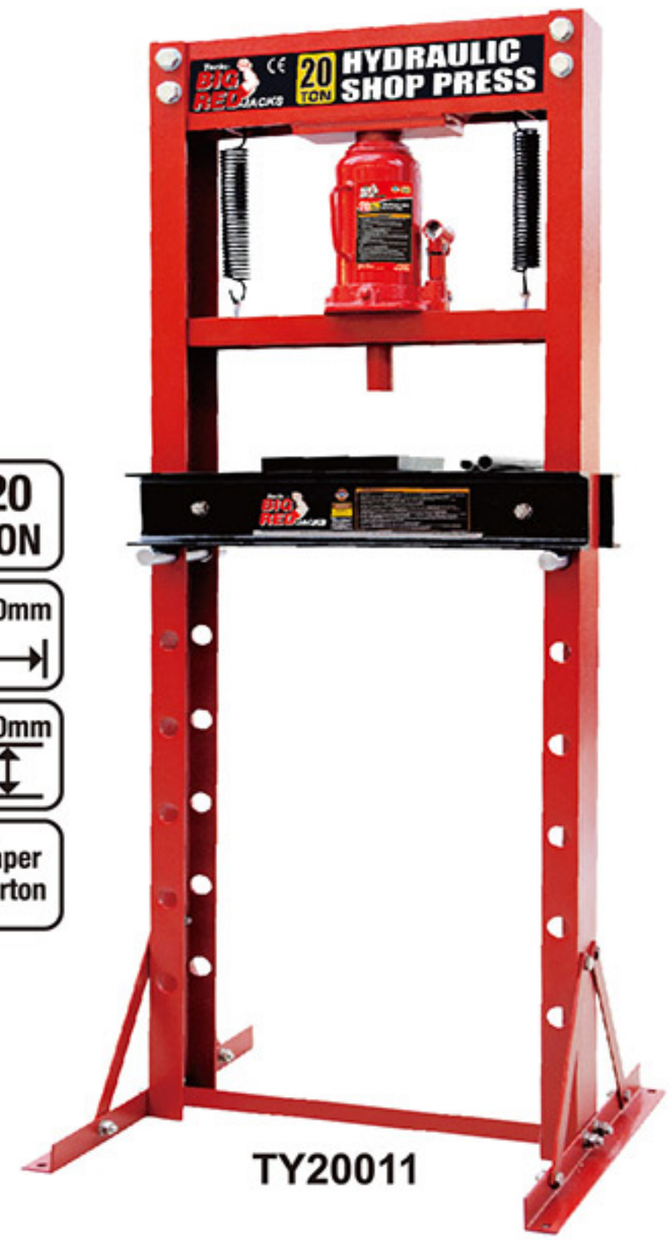

TY20011

12 TON
575mm
150mm
Paper Carton

TY12012

20 TON
640mm
150mm
Paper Carton

TY20012

30 TON
745mm
140mm
Paper Carton

TRD53001

Model:	TY06001	TY12003	TY12012	TY20011	TY20012	TRD53001
Capacity:	6 TON	12 TON	12 TON	20 TON	20 TON	30 TON
Stroke:	120 mm	150 mm	150 mm	150 mm	150 mm	140 mm
Work Range:	0-230 mm	0~610 mm	0~610 mm	0~710 mm	0~690 mm	0~800 mm
N.W.	20.5 kgs	42 kgs	48.5 kgs	66 kgs	68 kgs	122 kgs
G.W.	21.5 kgs	44 kgs	49.5 kgs	69.5 kgs	70.5 kgs	132 kgs
Package Size:	730x280x135 mm	1270x230x185 mm	1265x220x165 mm	1540x215x230 mm	1530x205x220 mm	1690x355x265mm
QTY/20'CY	700 PCS	390 PCS	340 PCS	233 PCS	210 PCS	150 PCS

Hydraulic Shop Press

Complies with ASME Safety Standards

TY10003

Model:	TY10003
Capacity:	10 TON
Stroke:	165 mm
Work Range:	0~340 mm
N.W.	46.5 kgs
G.W.	48 kgs
Package Size:	775x550x180 mm
QTY/20'CY	350 PCS

TY12001

Model:	TY12001
Capacity:	12 TON
Stroke:	165 mm
Work Range:	0-340 mm
N.W.	56.5 kgs
G.W.	58.5 kgs
Package Size:	795x420x180 mm
QTY/20'CY	287 PCS

TY12002

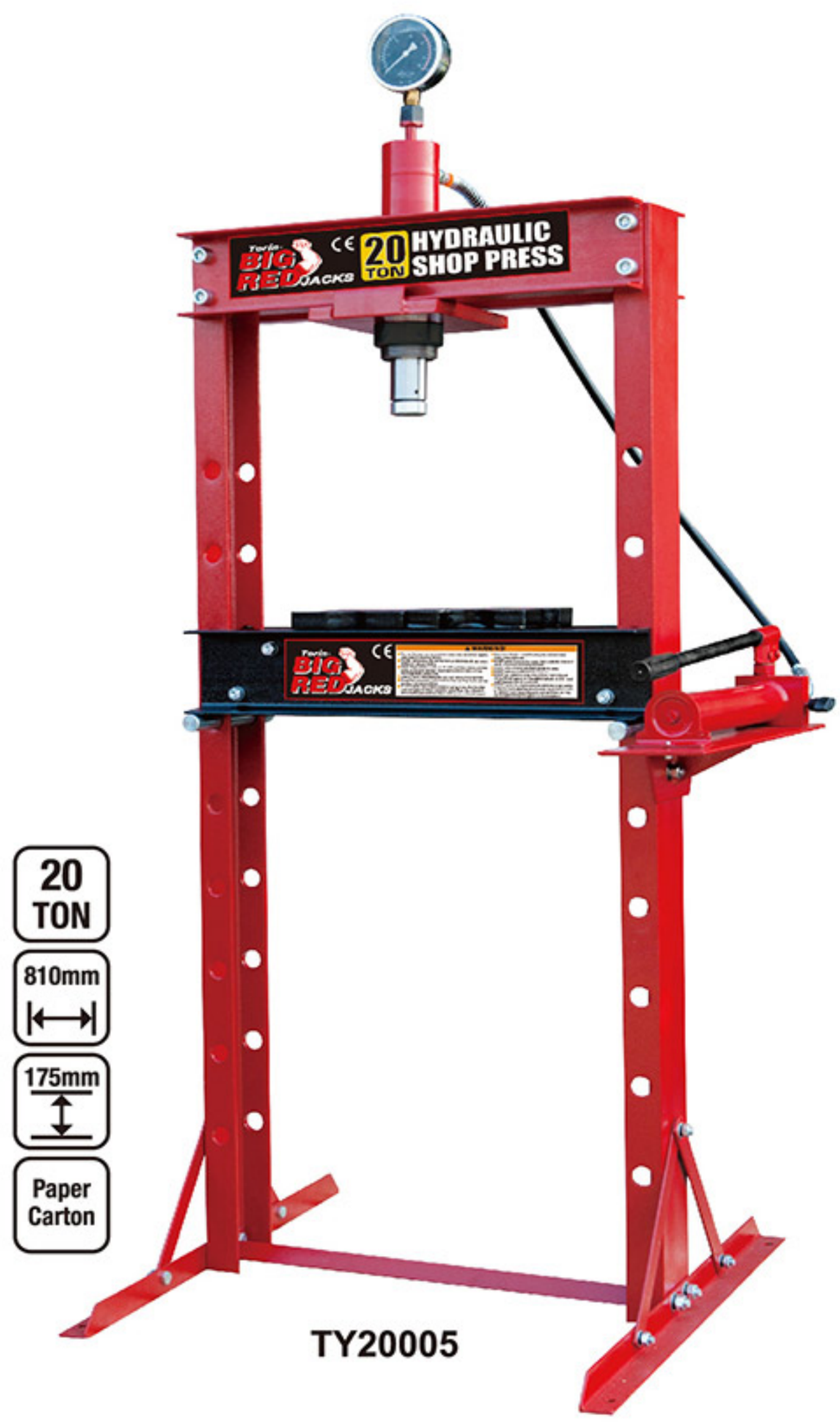

TY20005

Model:	TY12002	TY20005
Capacity:	12 TON	20 TON
Stroke:	165 mm	175 mm
Work Range:	0~920 mm	0~910 mm
N.W.	1# 54.5 kgs / 2# 14 kgs	1# 61.5 kgs / 2# 38.5 kgs
G.W.	1# 56.5 kgs / 2# 15 kgs	1# 63.5 kgs / 2# 39.5 kgs
Package Size:	1# 1390x175x215 mm 2# 675x230x170 mm	1# 1565x185x145 mm 2# 795x330x170 mm
QTY/20'CY	234 PCS	163 PCS

Hydraulic Shop Press

Complies with ASME Safety Standards

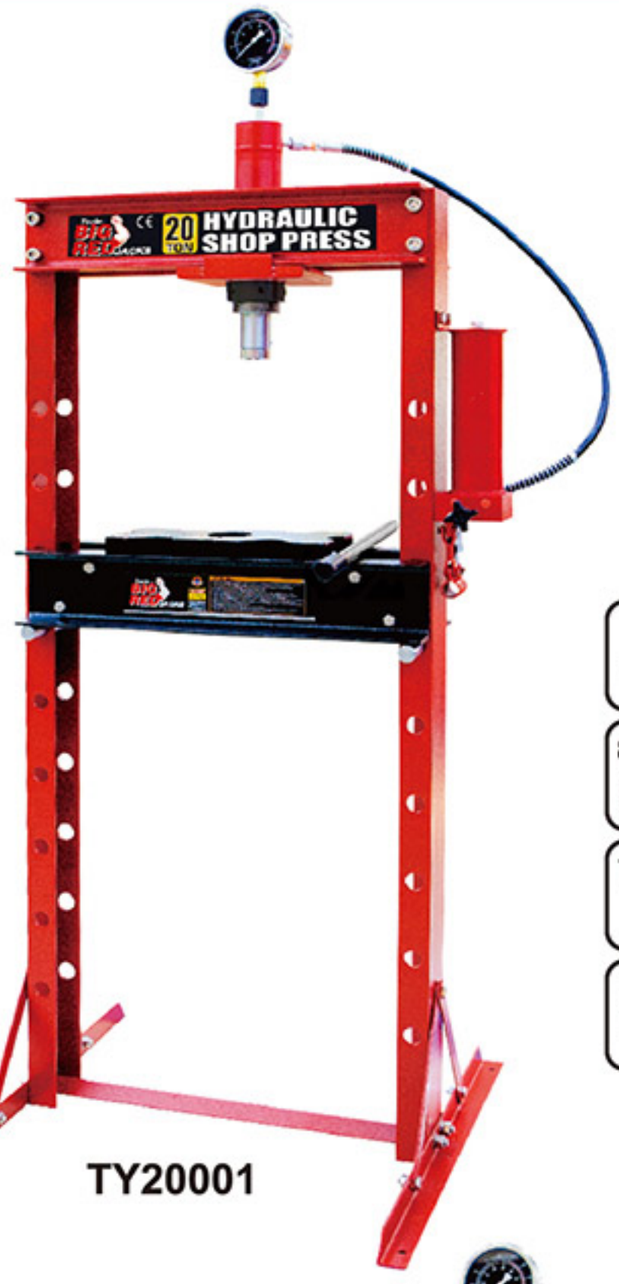

20 TON
780mm
175mm
Paper Carton

TY20001

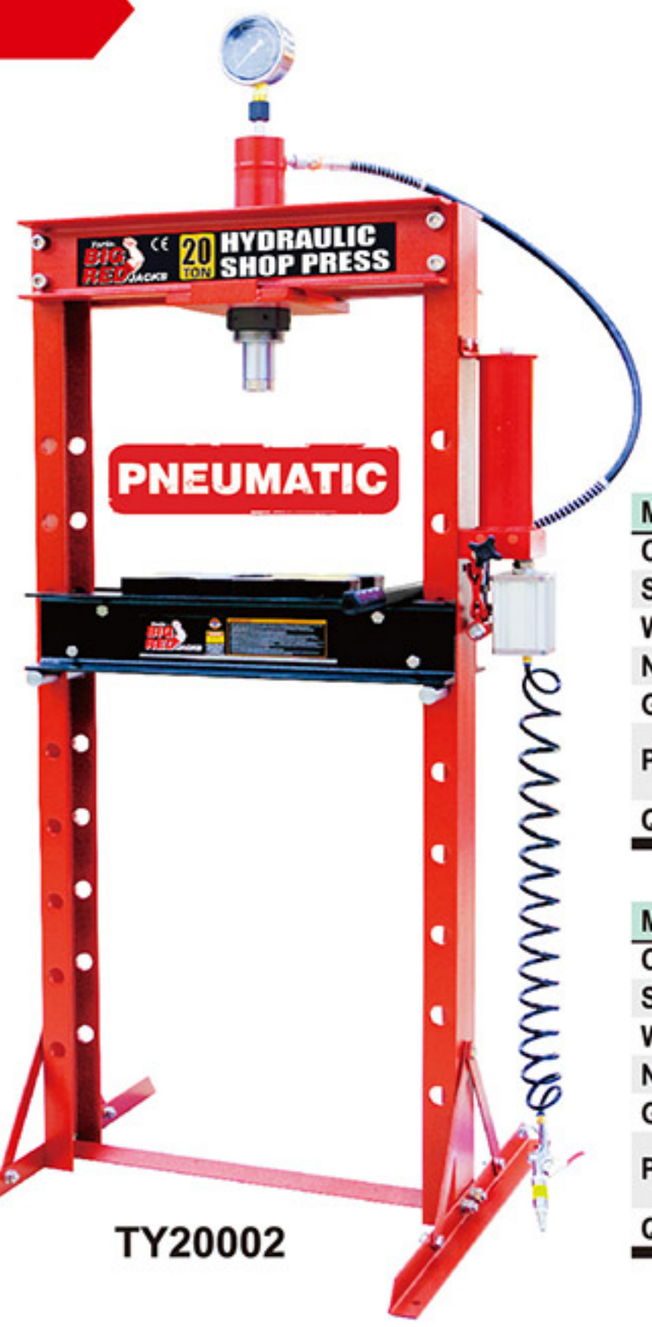

20 TON
800mm
175mm
Paper Carton

TY20002

Model:	TY20001
Capacity:	20 TON
Stroke:	175 mm
Work Range:	0~910 mm
N.W.	1# 60.8 kgs / 2# 36 kgs
G.W.	1# 61.8 kgs / 2# 37 kgs
Package Size:	1# 1565x185x145 mm 2# 795x330x150 mm
QTY/20'CY	170 PCS

Model:	TY20002
Capacity:	20 TON
Stroke:	175 mm
Work Range:	0~910 mm
N.W.	1# 60.8 kgs / 2# 37.5 kgs
G.W.	1# 61.8 kgs / 2# 38.5 kgs
Package Size:	1# 1565x185x145 mm 2# 795x330x150 mm
QTY/20'CY	170 PCS

30 TON
850mm
150mm
Wooden Box

TY30001

30 TON
870mm
150mm
Wooden Box

TY30002

Model:	TY30001	TY30002
Capacity:	30 TON	30 TON
Stroke:	150 mm	150 mm
Work Range:	0~970 mm	0~970 mm
N.W.	150 kgs	152 kgs
G.W.	163 kgs	165 kgs
Package Size:	1620x380x310 mm	1640x380x310 mm
QTY/20'CY	100 PCS	100 PCS

Hydraulic Shop Press

PNEUMATIC

Complies with ASME Safety Standards

CE

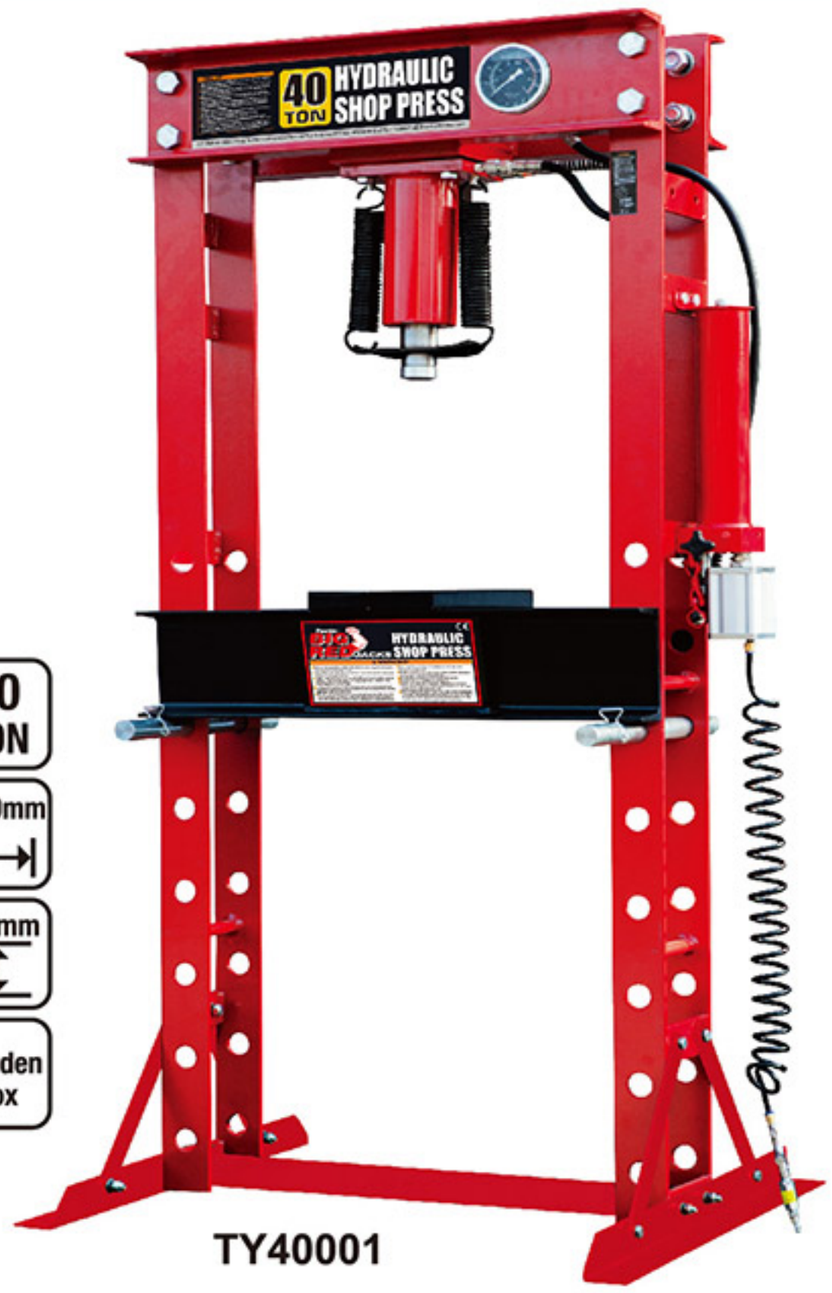

40 TON
1050mm
175mm
Wooden Box

TY40001

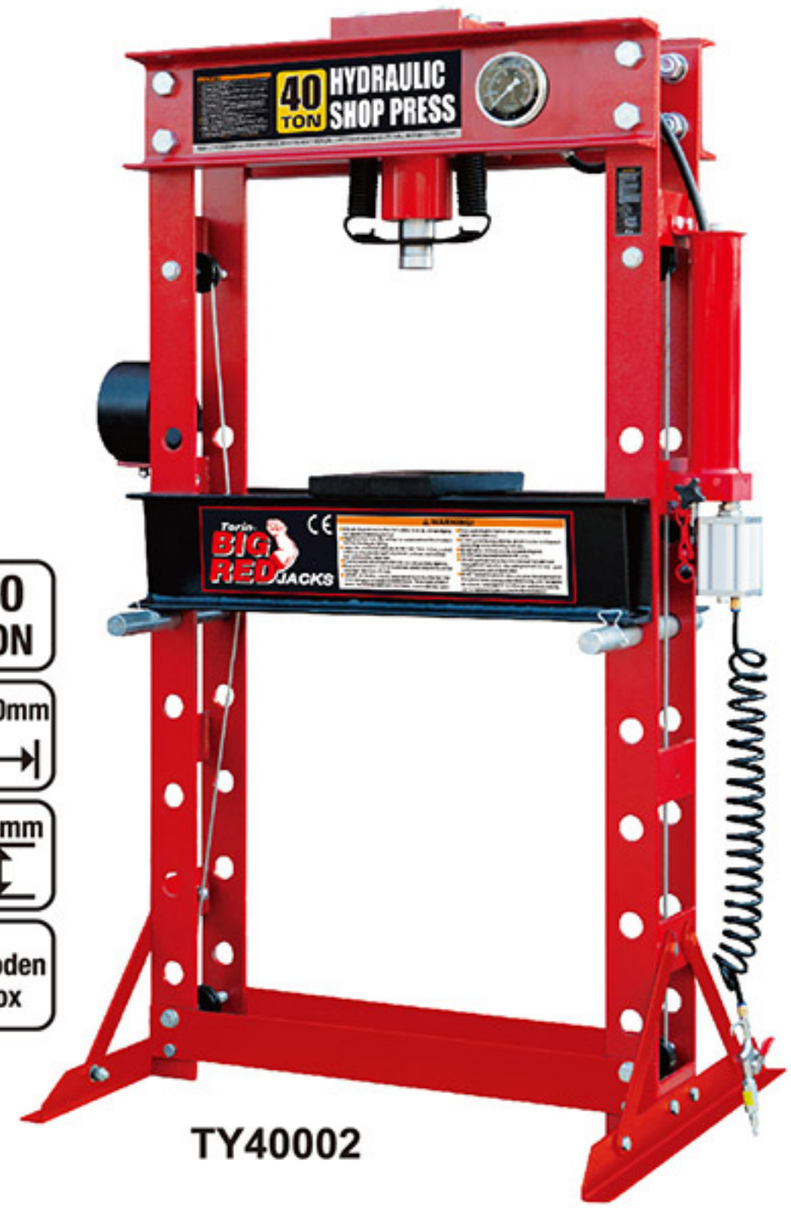

40 TON
1250mm
175mm
Wooden Box

TY40002

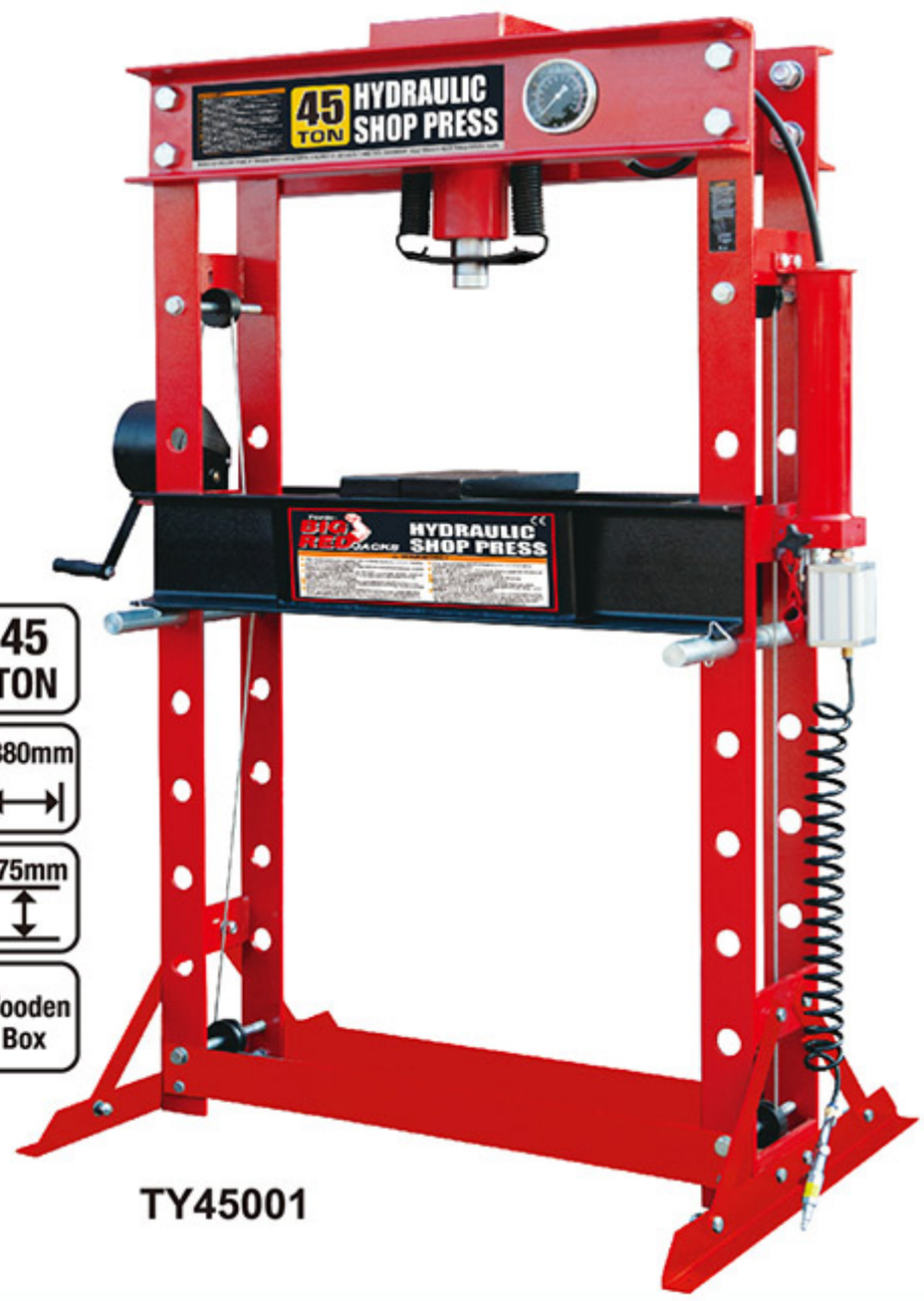

45 TON
1380mm
175mm
Wooden Box

TY45001

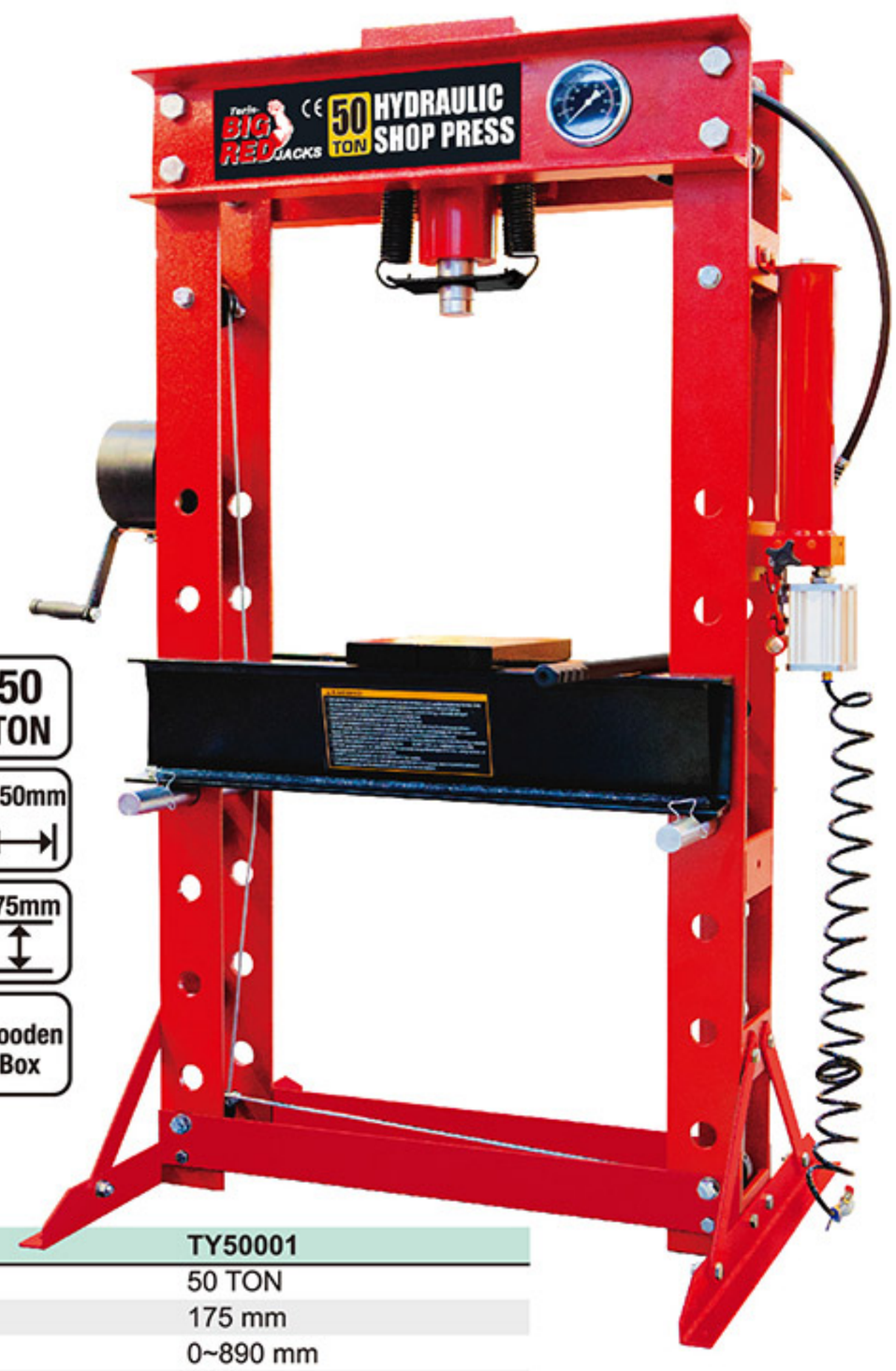

50 TON
1250mm
175mm
Wooden Box

TY50001

Model:	TY40001	TY40002	TY45001	TY50001
Capacity:	40 TON	40 TON	45 TON	50 TON
Stroke:	175 mm	175 mm	175 mm	175 mm
Work Range:	0~1080 mm	0~890 mm	0~865 mm	0~890 mm
N.W.	225 kgs	236.5 kgs	257 kgs	256 kgs
G.W.	247 kgs	274.5 kgs	311 kgs	286 kgs
Package Size:	2010x550x330 mm	920x380x1792 mm	1810x1060x514mm	920x380x1792 mm
QTY/20'CY	60 PCS	36 PCS	24 PCS	36 PCS

Special Quality Design

Polished and treated cylinder rams use high performance seals

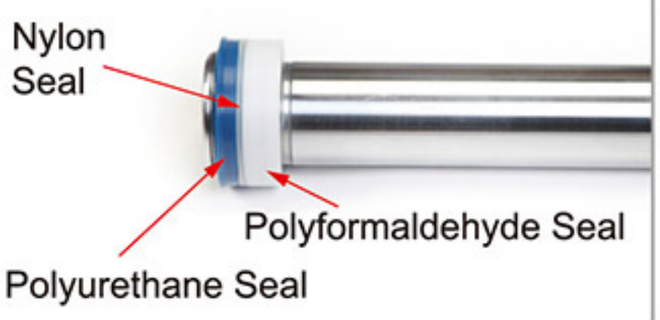

Polished inner cylinder walls extend the life of the seals to minimize abrasion and wear

Polished and treated pump cylinder pistons use high performance seals

High Quality Air Pump

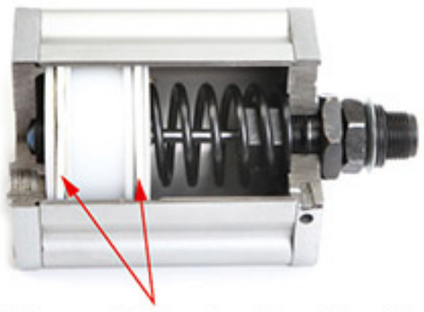

Polyformaldehyde Double Seal

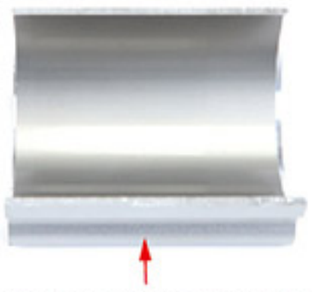

Fully polished inner aluminum cylinder wall

Anti-drop vent screw

Welding pump

Welding pump

Aluminium alloy nickel-plated air pump

Nickel-plated pump cylinder

Oil return valve with lock

Option:

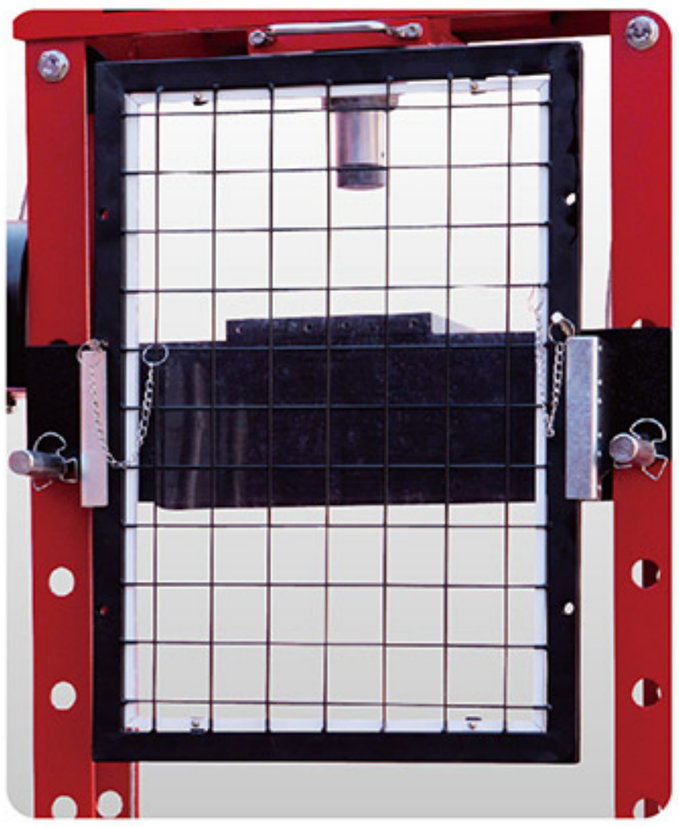

Protective mesh panel

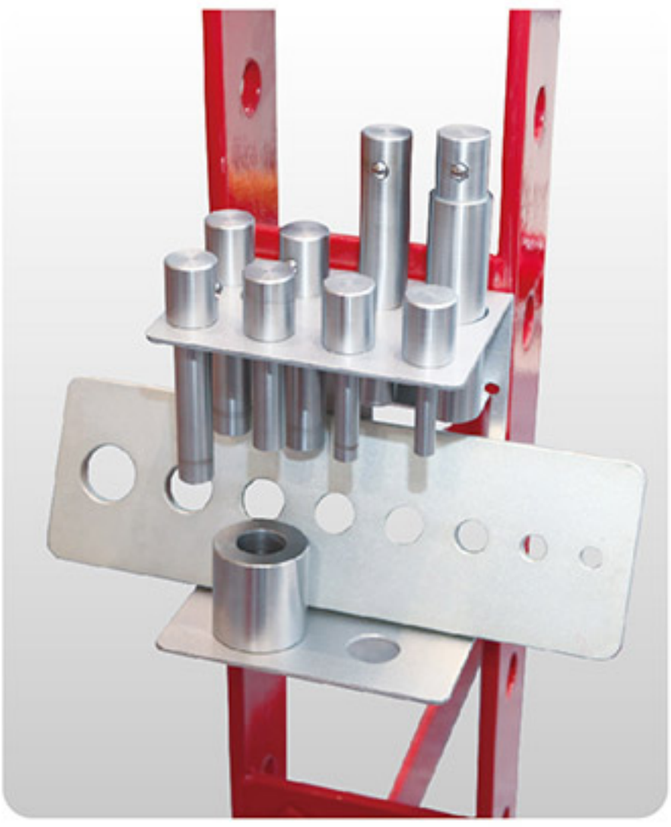

Adaptor

Application:
Hydraulic Shop Press are designed for automotive, truck, implement, fleet, and imdustrial repair shops where pressing, bending, straightening, forming, holding required.

PROFESSIONAL

Hydraulic Shop Press

Complies with ASME Safety Standards

CE

20 TON
770mm
175mm
Wooden Box

TY20021

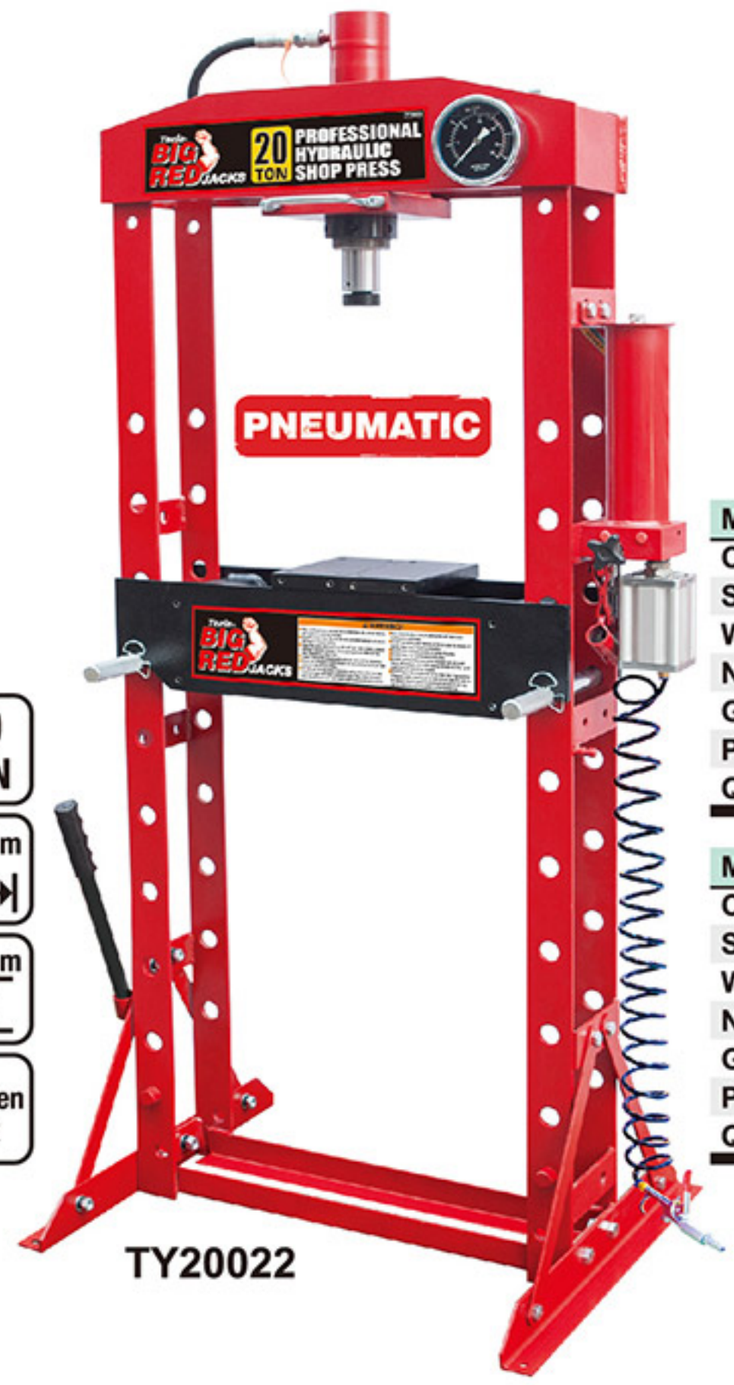

20 TON
790mm
175mm
Wooden Box

TY20022

Model:	TY20021
Capacity:	20 TON
Stroke:	175 mm
Work Range:	0~900 mm
N.W.	98 kgs
G.W.	125 kgs
Package Size:	1690x700x280 mm
QTY/20'CY	64 PCS

Model:	TY20022
Capacity:	20 TON
Stroke:	175 mm
Work Range:	0~900 mm
N.W.	99 kgs
G.W.	126 kgs
Package Size:	1690x700x280 mm
QTY/20'CY	64 PCS

Model:	TY30022
Capacity:	30 TON
Stroke:	150 mm
Work Range:	0~940 mm
N.W.	123 kgs
G.W.	150 kgs
Package Size:	1690x700x280 mm
QTY/20'CY	64 PCS

Model:	TY30021
Capacity:	30 TON
Stroke:	150 mm
Work Range:	0~940 mm
N.W.	124 kgs
G.W.	151 kgs
Package Size:	1690x700x280 mm
QTY/20'CY	64 PCS

30 TON
790mm
150mm
Wooden Box

TY30022

30 TON
770mm
150mm
Wooden Box

TY30021

Hydraulic Shop Press

PROFESSIONAL CE

50 TON | 1310mm | 200mm | Wooden Box

Complies with ASME Safety Standards

Patent No.:
ZL201010181945.X
ZL201220040182.1
ZL201220188858.1
ZL201120087955.7

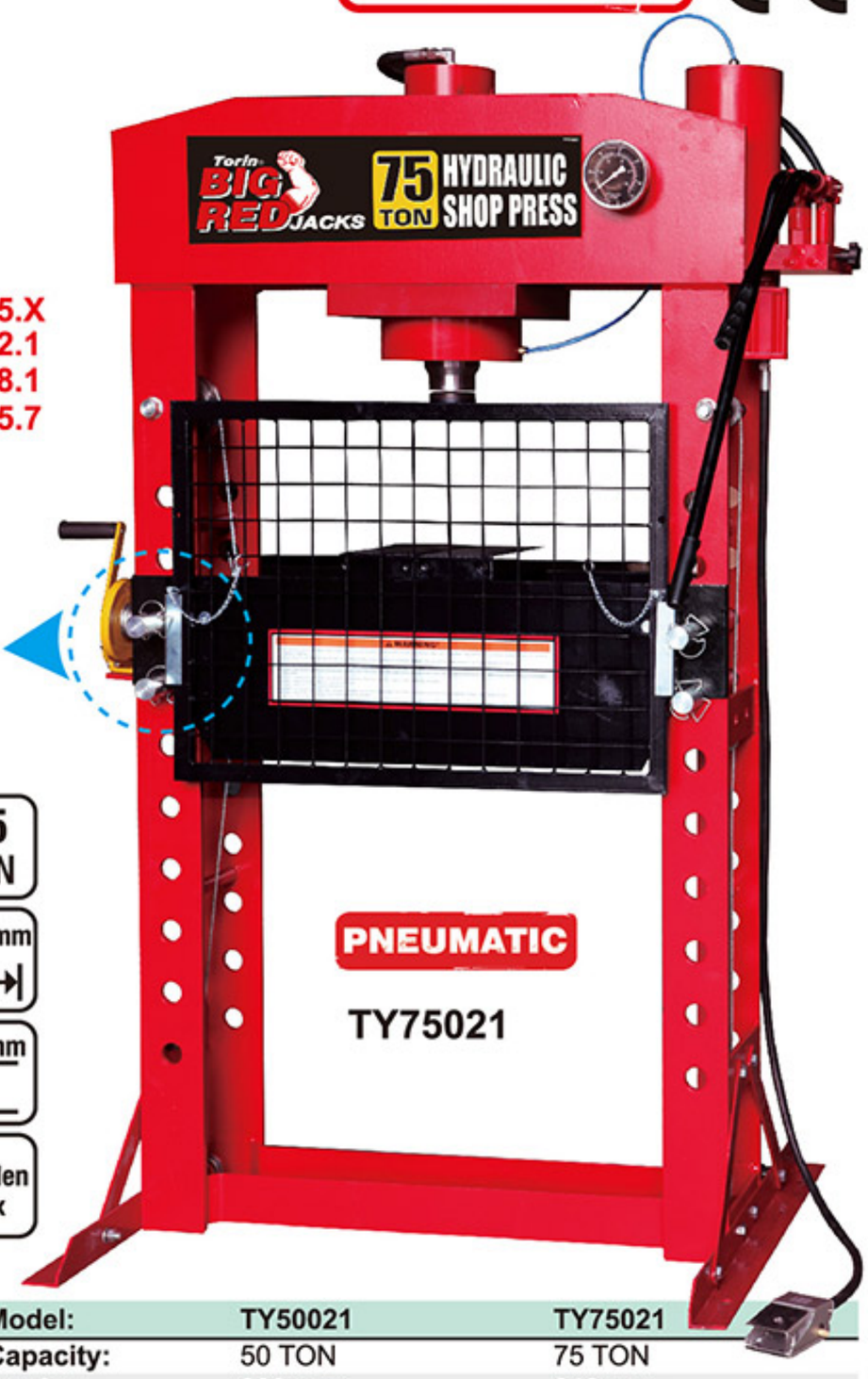

Safety Guard

75 TON | 1430mm | 240mm | Wooden Box

Model:	TY50021	TY75021
Capacity:	50 TON	75 TON
Stroke:	200 mm	240 mm
Work Range:	0~920 mm	0~900 mm
N.W.	293 kgs	457 kgs
G.W.	339 kgs	530 kgs
Package Size:	2008x1168x428 mm	1370x840x2124 mm
QTY/20'CY	20 PCS	10 PCS

TRD510001

100 TON | 1110mm | 300mm | Wooden Box

TRD515001

150 TON | 1470mm | 350mm

TRD520001

200 TON | 1470mm | 350mm

Model:	TRD510001
Capacity:	100 TON
Stroke:	280 mm
Work Range:	0~950 mm
N.W.	900 kgs
G.W.	1050 kgs
Package Size:	1000x1880x520 mm
QTY/20'CY	12 PCS

Model:	TRD515001
Capacity:	150 TON
Stroke:	350 mm
Work Range:	0~950 mm
N.W.	1300 kgs
G.W.	1350 kgs
Package Size:	1470x2270x650 mm
QTY/20'CY	10 PCS

Model:	TRD520001
Capacity:	200 TON
Stroke:	350 mm
Work Range:	0~950 mm
N.W.	1750 kgs
G.W.	1800 kgs
Package Size:	1520x2200x520 mm
QTY/20'CY	7 PCS

Hydraulic Shop Press

PNEUMATIC

Complies with ASME Safety Standards

CE

20 TON
800mm
175mm
Wooden Box

TY20030

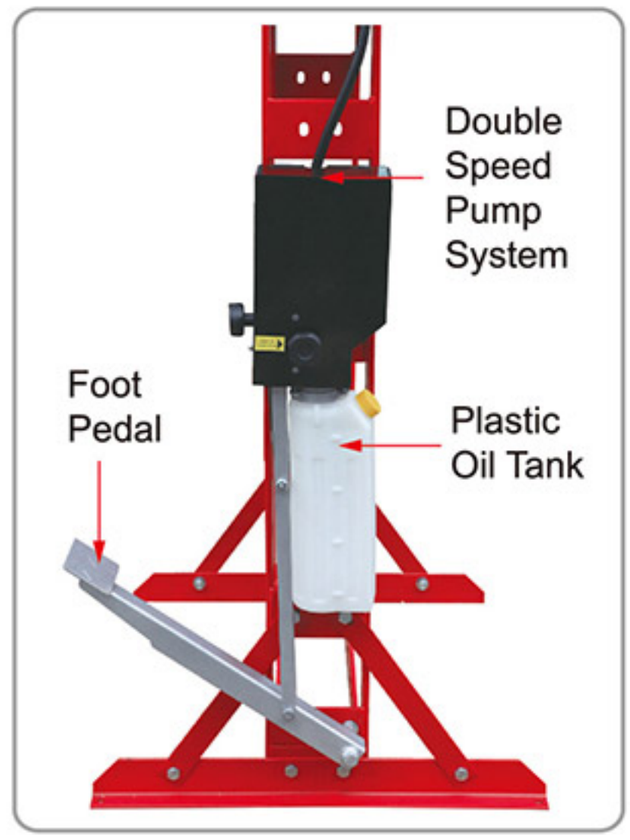

Patent Design

Patent No.:
ZL201010181945.X
ZL201110077532.1
ZL201220188858.1
ZL201110077547.8
ZL201120190042.8

Model:	TY20030	TY30030	TY50030
Capacity:	20 TON	30 TON	50 TON
Stroke:	175 mm	150 mm	200 mm
Work Range:	0~900 mm	0~940 mm	0~920 mm
N.W.	106 kgs	135 kgs	297 kgs
G.W.	133 kgs	159 kgs	345 kgs
Package Size:	1700x835x300mm	1700x835x300mm	2008x1168x428 mm
QTY/20'CY	42 PCS	42 PCS	20 PCS

30 TON
800mm
150mm
Wooden Box

TY30030

50 TON
1310mm
200mm
Wooden Box

TY50030

www.tongrunjacks.com

Professional Hydraulic Shop Press

Complies with ASME Safety Standards

Features:

- Safety valve
- Industry seals
- Robots welding
- Laser cutting frame
- Removable parts tray
- Double speed pump

Foot pedal for pneumatic operation

15 TON

565mm

170mm

Paper Carton

TRSP15HL

20 TON

770mm

220mm

Wooden Box

TRSP20HAM

Dustproof cover

Screw extension

Punches sets are Standard acsessories

Features:

- Safety valve
- Industry seals
- Robots welding
- Laser cutting frame
- Removable parts tray
- Foot pedal for pneumatic operation
- Pneumatic & manually pump with double speed action

V-blocks & 180° guiding design

Special design for more height position of working table

Model	Capacity	Air Pressure	N.W. / G.W.	Package Size	QTY/20'CY
TRSP15HL	15 Ton	/	56 / 58 kgs	600x850x300mm	108 PCS
TRSP20HAM	20 Ton	0.9-1.2Mpa	140 / 146 kgs	1800x850x350mm	25 PCS

Model	Capacity	A	B	C	D	E	G1	G2	R	R1	R2	M
TRSP15HL	15 Ton	565	440	855	134	355	45	340	170	95	75	/
TRSP20HAM	20 Ton	770	600	1800	148	505	25	850	220	145	75	200

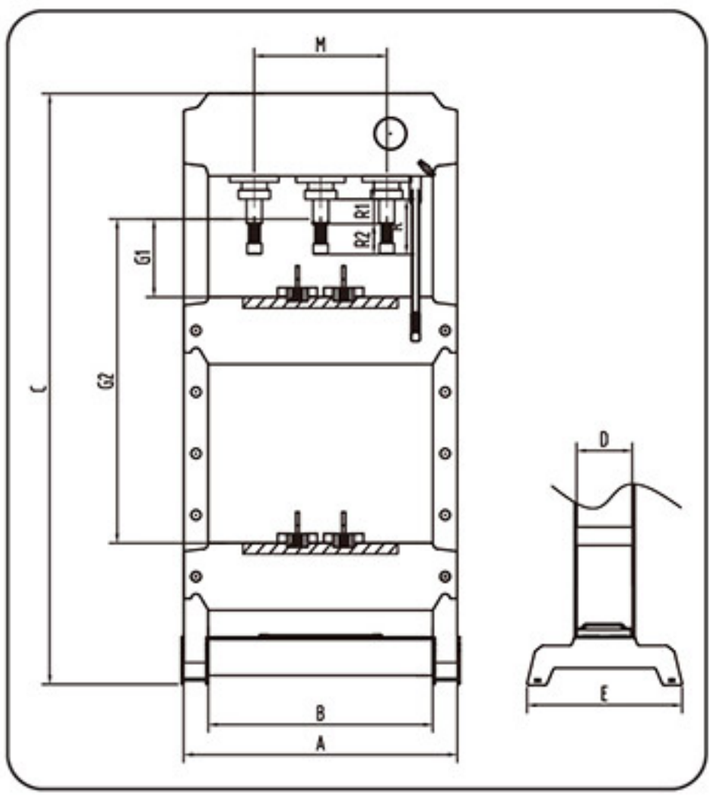

Professional Hydraulic Shop Press

Complies with ASME Safety Standards

30 TON
770mm
220mm
Wooden Box

TRSP30HM

30 TON
770mm
220mm
Wooden Box

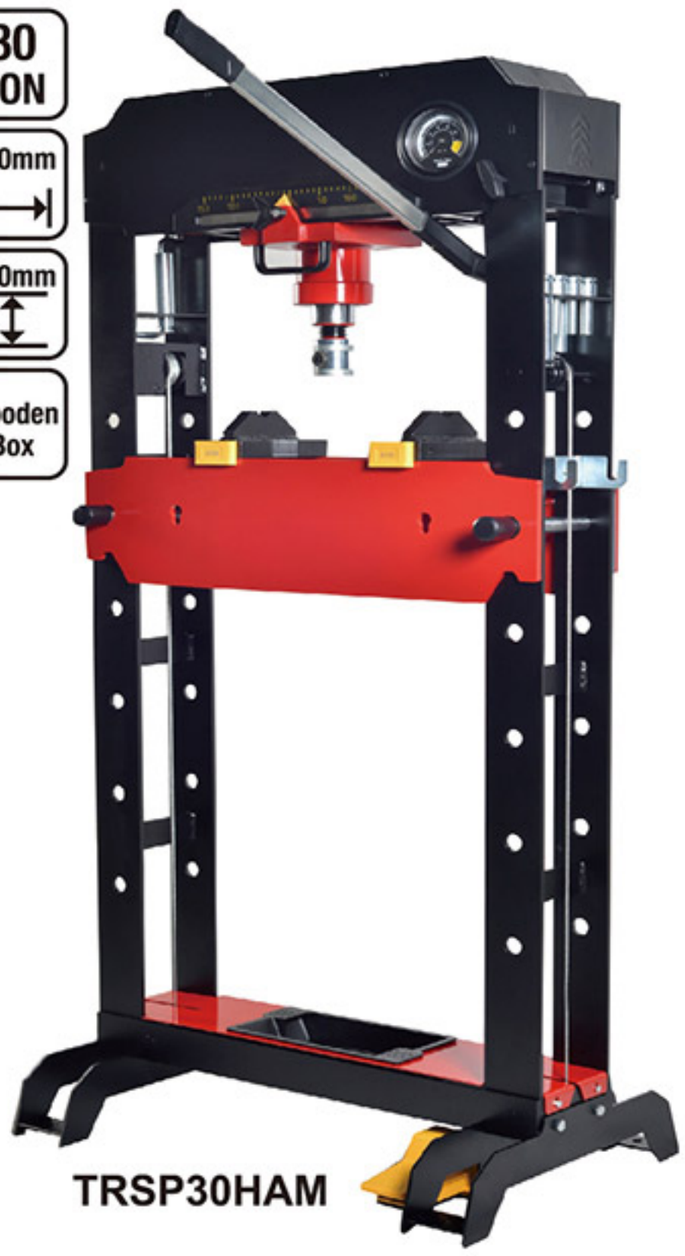

TRSP30HAM

Features:

- Safety valve
- Industry seals
- Robots welding
- Laser cutting frame
- Removable parts tray
- Foot pedal for pneumatic operation
- Pneumatic & manually pump with double speed action

TRSP50HAM

50 TON
930mm
220mm
Wooden Box

Dustproof cover

Screw extension

Punches sets are Standard acsessories

V-blocks & 180° guiding design

Special design for more height position of working table

Model	Capacity	Air Pressure	N.W. / G.W.	Package Size	QTY/20'CY
TRSP30HM	30 Ton	/	200 / 207 kgs	1800x850x350mm	25 PCS
TRSP30HAM	30 Ton	0.9-1.2Mpa	200 / 207 kgs	1800x850x350mm	25 PCS
TRSP50HAM	50 Ton	0.9-1.2Mpa	280 / 288 kgs	1900x1000x450mm	20 PCS

Model	Capacity	A	B	C	D	E	G1	G2	R	R1	R2	M
TRSP30HM	30 Ton	770	600	1800	148	505	25	850	220	145	75	200
TRSP30HAM	30 Ton	770	600	1800	148	505	25	850	220	145	75	200
TRSP50HAM	50 Ton	930	750	1900	200	535	80	780	220	145	75	280

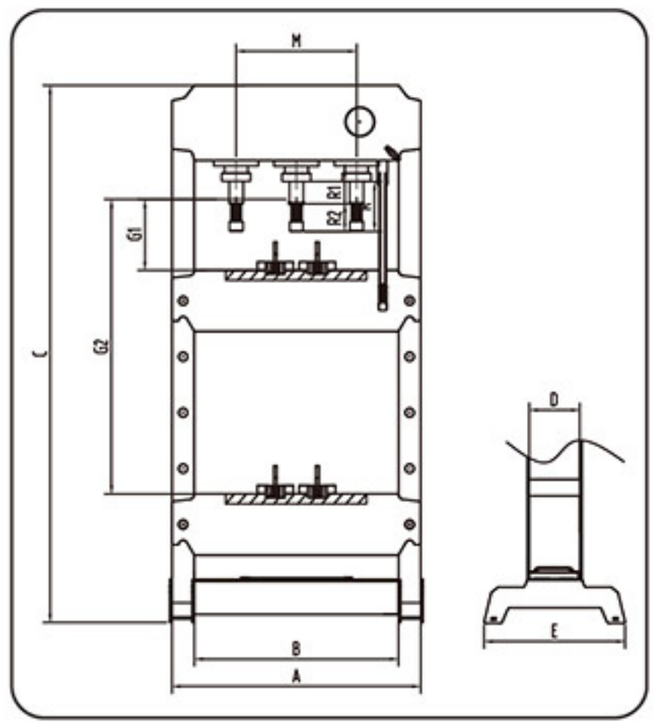

Hydraulic Shop Press

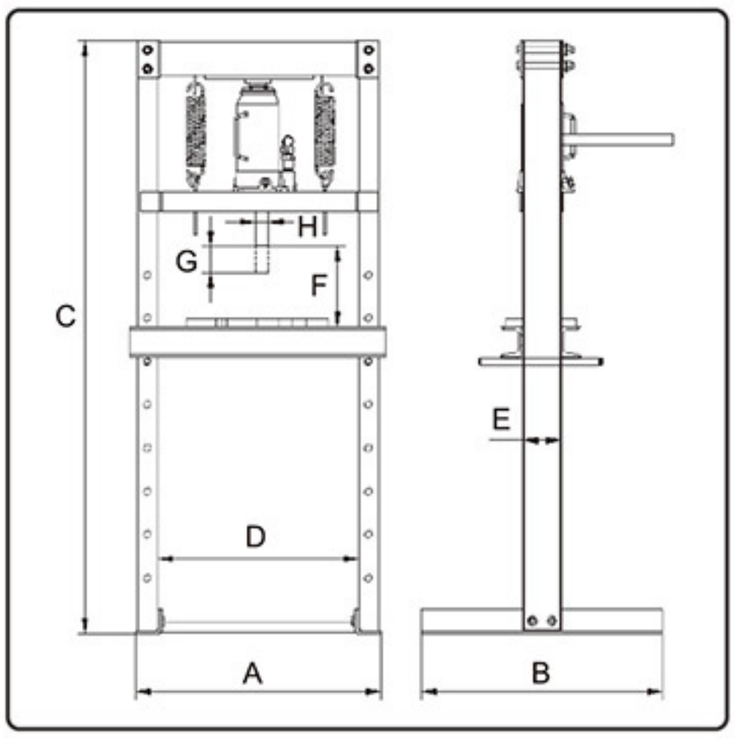

Model	TY06001	TY12003	TY12012	TY20011	TY20012	TRD53001
A (mm)	395	530	575	640	640	745
B (mm)	330	500	500	540	540	720
C (mm)	865	1230	1195	1495	1495	1580
D (mm)	265	415	415	465	465	600
E (mm)	80	80	80	100	100	135
F (mm)	0~230	0~610	0~610	0~710	0~690	0~800
G (mm)	120	150	150	150	150	140
H (mm)	Ø18	Ø25	Ø30	Ø35	Ø40	Ø40

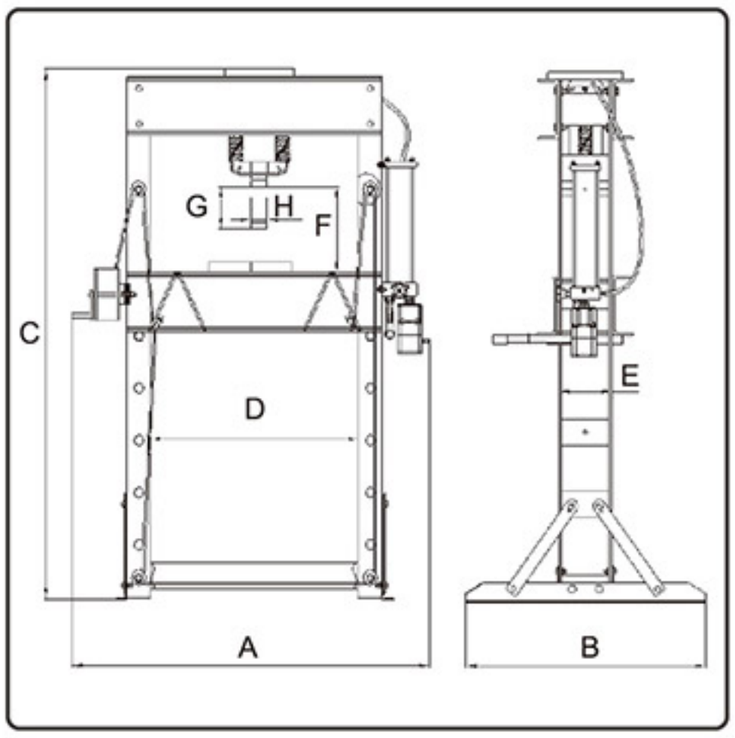

Model	TY10003	TY12001	TY12002	TY20005	TY20001	TY20002
A (mm)	574	780	780	810	760	780
B (mm)	450	500	500	700	700	700
C (mm)	715	1050	1650	1810	1780	1780
D (mm)	340	510	510	540	550	550
E (mm)	110	80	80	100	100	100
F (mm)	0~350	0-340	0~920	0~910	0~910	0~910
G (mm)	165	165	165	175	175	175
H (mm)	Ø42	Ø55	Ø55	Ø48	Ø48	Ø48

Model	TY30001	TY30002	TY40001	TY40002	TY45001	TY50001
A (mm)	850	870	1050	1250	1380	1250
B (mm)	700	700	780	800	800	800
C (mm)	1825	1825	1930	1660	1720	1680
D (mm)	540	540	660	680	820	650
E (mm)	100	100	170	175	220	175
F (mm)	0~970	0~970	0~1080	0~890	0~865	0~890
G (mm)	150	150	175	175	175	175
H (mm)	Ø53	Ø53	Ø53	Ø53	Ø53	Ø53

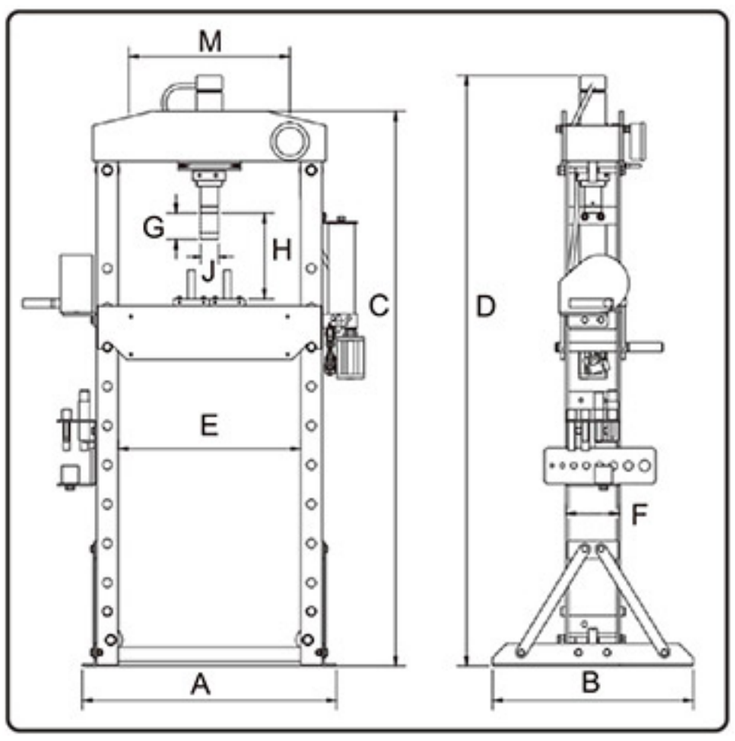

Model	TY20021 TY20022 TY20030	TY30021 TY30022 TY30030	TY50021 TY50030	TY75021
A (mm)	720	720	900	1150
B (mm)	560	560	800	800
C (mm)	1550	1550	1825	1865
D (mm)	1650	1700	1940	1950
E (mm)	510	510	710	800
F (mm)	150	150	220	250
G (mm)	175	175	200	240
H (mm)	0~900	0~940	0~920	0~900
J (mm)	Ø48	Ø53	Ø63	Ø78
M (mm)	±125	±125	±125	±140

Hydraulic Shop Press

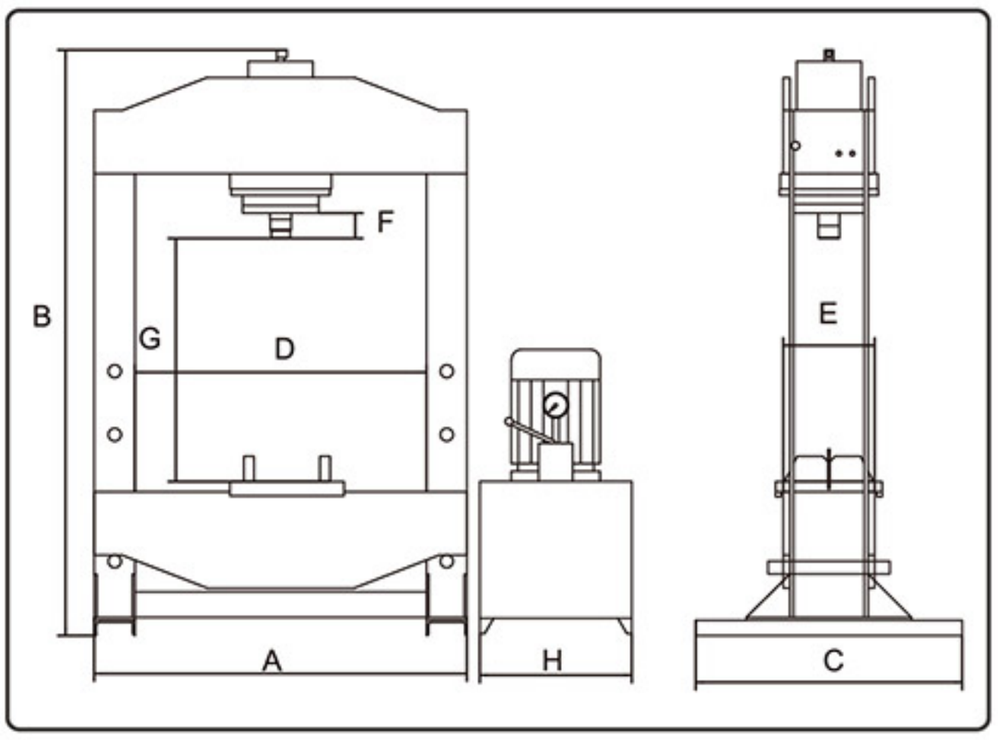

Model	TRD510001	TRD515001	TRD520001
A (mm)	1100	1470	1470
B (mm)	2013	2310	2219
C (mm)	950	1050	1150
D (mm)	820	1150	1150
E (mm)	355	378	500
F (mm)	300	350	350
G (mm)	910	860	860
H (mm)	350	350	350

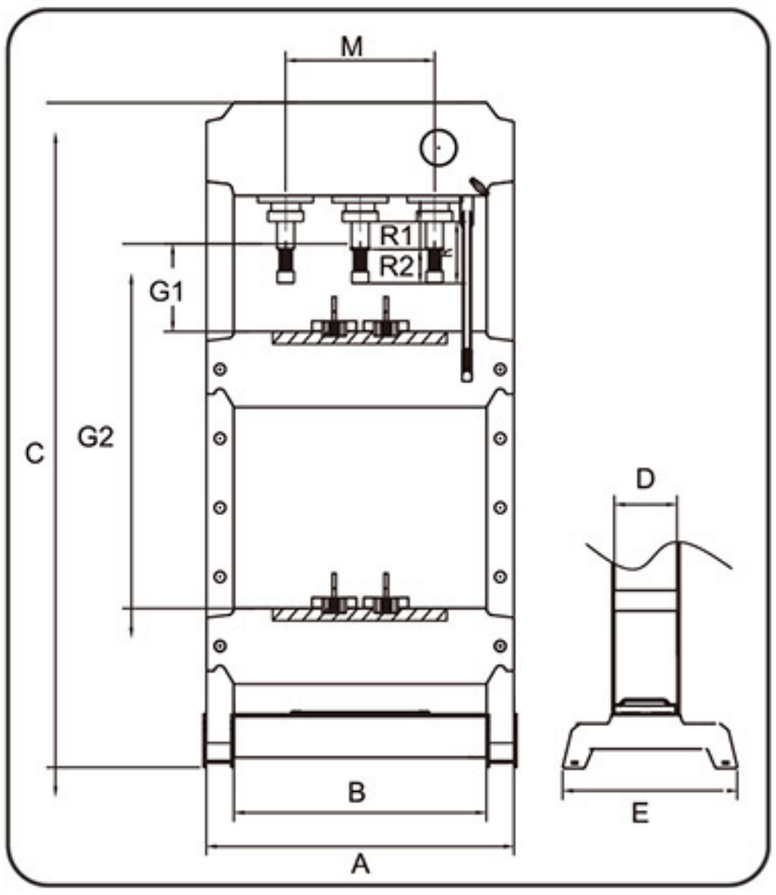

Model	TRSP15HL	TRSP20HAM	TRSP30HM	TRSP30HAM	TRSP50HAM
A (mm)	565	770	770	770	930
B (mm)	440	600	600	600	750
C (mm)	855	1800	1800	1800	1900
D (mm)	134	148	148	148	200
E (mm)	355	505	505	505	535
G1 (mm)	45	25	25	25	80
G2 (mm)	340	850	850	850	780
R (mm)	170	220	220	220	220
R1 (mm)	95	145	145	145	145
R2 (mm)	75	75	75	75	75
M (mm)	/	200	200	200	280

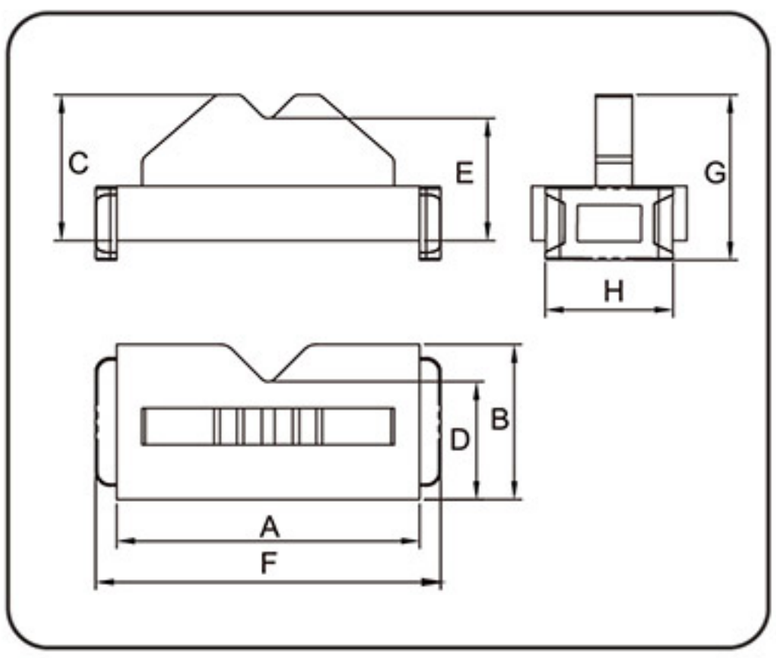

Model	TRSP15HL	TRSP20HAM	TRSP30HM	TRSP30HAM	TRSP50HAM
A (mm)	163	184	188	188	249
B (mm)	85	85	85	85	130
C (mm)	70	80	80	80	125
D (mm)	64.5	59.6	59.6	59.6	94.6
E (mm)	57.1	67.1	67.1	67.1	102.1
F (mm)	186	207	211	211	272
G (mm)	85.8	90.5	90.5	90.5	135.2
H (mm)	64.8	70	70	70	80

Transmission Jack

TEL05001
0.5 TON
CE

TEL03004S
0.3 TON
TEL05004S
0.5 TON
CE

TEL05007
0.5 TON
CE

Double Pump

NEW PRODUCT

Complies with ASME Safety Standards

Telescoping Cylinder Rams

TEL05005
0.5 TON
CE

Double Pump

Model	Capacity	Min. Height	Max. Height	N.W.	G.W.	Package Size	QTY/20'CY
TEL05001	0.5 Ton	1260 mm	1750 mm	33 kgs	35.5 kgs	660x430x170 mm	480 PCS
TEL03004S	0.3 Ton	1140 mm	1950 mm	24 kgs	28.5 kgs	1110x280x155 mm	580 PCS
TEL05004S	0.5 Ton	1140 mm	1950 mm	24 kgs	28.5 kgs	1110x280x155 mm	580 PCS
TEL05005	0.5 Ton	890 mm	1790 mm	57 kgs	65 kgs	530x320x750 mm	202 PCS
TEL05007	0.5 Ton	820 mm	1980 mm	50 kgs	58 kgs	530x320x750 mm	202 PCS

Transmission Jack

TEL05006
0.5 TON

Single Pump

Model:	TEL05006
Capacity:	0.5 Ton
Min. Height (mm)	885
Max. Height (mm)	1840
N.W. / G.W. (kgs)	79 / 88
Package Size (mm)	560x360x935
QTY/20'CY (PCS)	108

Model:	TEL10001
Capacity:	1 TON
Min. Height (mm)	880
Max. Height (mm)	1840
N.W. / G.W. (kgs)	71 / 90
Package Size (mm)	590x360x855
QTY/20'CY (PCS)	108

Telescoping Cylinder Rams

TEL10001
1 TON

Single Pump

TREL0502A
0.5 TON

Single Pump

TREL0501A
0.5 TON

Double Pump

Model:	TREL0501A	TREL0502A
Capacity:	0.5 TON	0.5 TON
Min. Height (mm)	870	790
Max. Height (mm)	1795	1715
N.W. / G.W. (kgs)	71 / 77	77 / 83
Package Size (mm)	520x230x800	570x370x840
QTY/20'CY (PCS)	230	180
MOQ (PCS)	50	50

PNEUMATIC

Transmission Jack

The Low Profile Transmission jack for is designed for transmission installation and removal. It features a 360° handle that offers rotational mobility for hard-to-reach lifting points. Universal mounting head provides a wide fore and aft tilt range. Manual operated hydraulic system, bypass system prevents over-extension and accidental overloading. Low profile design is enhanced by four heavy duty swivel casters for easy maneuvering throughout the shop. Fits most transmissions.

TE05001
0.5 Ton

TE05002
0.5 Ton

NEW PRODUCT

TE10001
1 Ton

TE15001
1.5 Ton

NEW PRODUCT

TE20002
2 Ton

NEW PRODUCT

Model:	TE05001	TE05002	TE10001
Capacity:	0.5 TON	0.5 TON	1 TON
Min. Height (mm)	215	175	210
Max. Height (mm)	765	765	780
N.W. / G.W. (kgs)	33.5 / 38.5	51 / 53	72 / 75
Package Size (mm)	815x470x245	970x485x200	965x530x240
QTY/20'CY (PCS)	279	280	198

Model:	TE15001	TE20002
Capacity:	1.5 TON	2 TON
Min. Height (mm)	185	210
Max. Height (mm)	850	960
N.W. / G.W. (kgs)	77 / 89	123.5 / 140
Package Size (mm)	970x575x315	1155x715x350
QTY/20'CY (PCS)	166	98

Transmission Jack

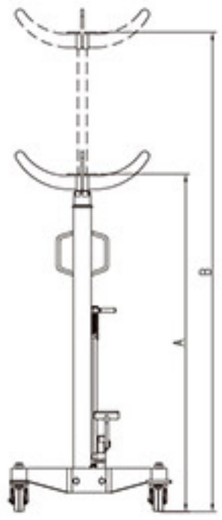

Model	TEL04011
Capacity	0.4 Ton
Min. Height (mm) (A)	1240
Max. Height (mm) (B)	2090
N.W. / G.W. (kg)	26 / 29
Package Size (mm)	1235x530x125
QTY / 20'CY (PCS)	324

Model	TEL06011
Capacity	0.6 Ton
Min. Height (mm) (A)	1135
Max. Height (mm) (B)	1980
N.W. / G.W. (kg)	34 / 37
Package Size (mm)	1145x340x250
QTY / 20'CY (PCS)	288

Patent No.:
ZL201210025173.X
ZL201220168382.5
ZL201110083123.2

TEL04011
0.4 Ton

TEL06011
0.6 Ton

Optional Choose For
Special Clamp Saddle

Model	TEL08011
Capacity	0.8 Ton
Min. Height (mm) (A)	850
Max. Height (mm) (B)	1840
N.W. / G.W. (kg)	46 / 49
Package Size (mm)	875x390x260
QTY / 20'CY (PCS)	304

Model	TEL15011
Capacity	1.5 Ton
Min. Height (mm) (A)	1130
Max. Height (mm) (B)	1915
N.W. / G.W. (kg)	55.5 / 59
Package Size (mm)	1175x320x260
QTY / 20'CY (PCS)	248

CE

Telescoping
Cylinder Rams

TEL08011
0.8 Ton

Nylon Wheel

TEL15011
1.5 Ton

Stronger
Steel Base

www.tongrunjacks.com

2 Post Base Plate with Sub-frame Assembly

NEW PRODUCT

QJY240B-E 4t

- Fully automatic electric control panel.
- Driven by dual hydraulic cylinders.
- Chain type lifting system.
- Internal Electric locking mechanism, w/two point safety latches in each column.
- Automatic safety arm locks.
- Easy to operate up and down switches on electrical control box.
- Steel wire rope equalizing cables.
- Multi-voltage power supply is available for electrical requirements.
- Optional motors available.
- Adjustable lift pads and adapters
- Wide base platform for extra support.
- Durable powder coat finish.

Electric Safety Lock

CE

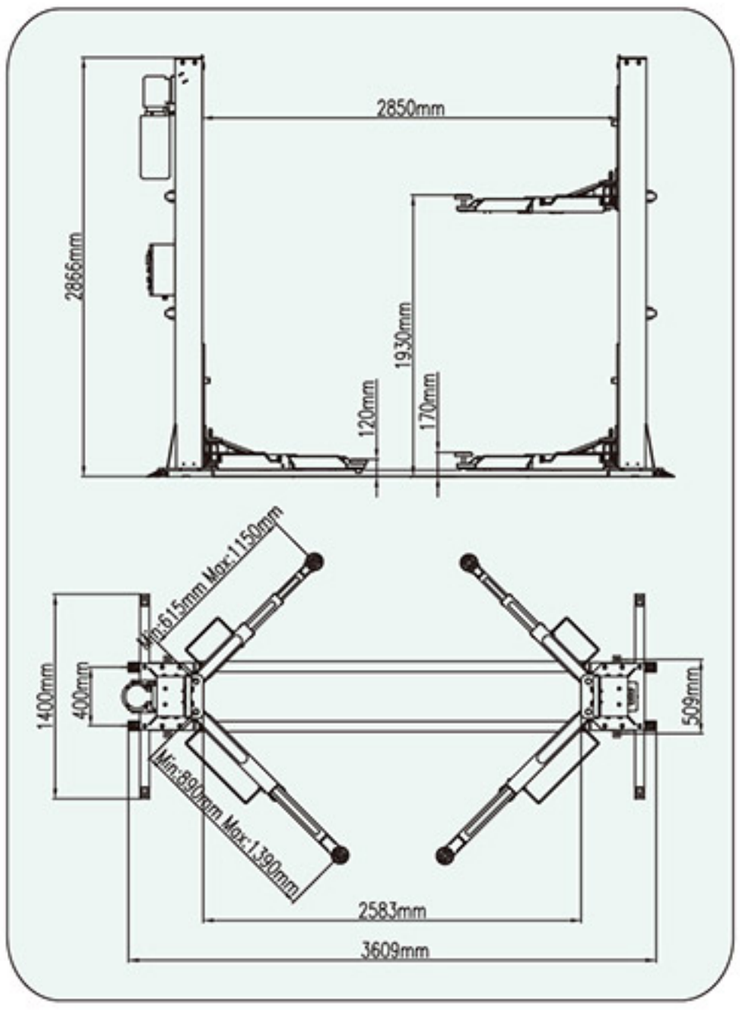

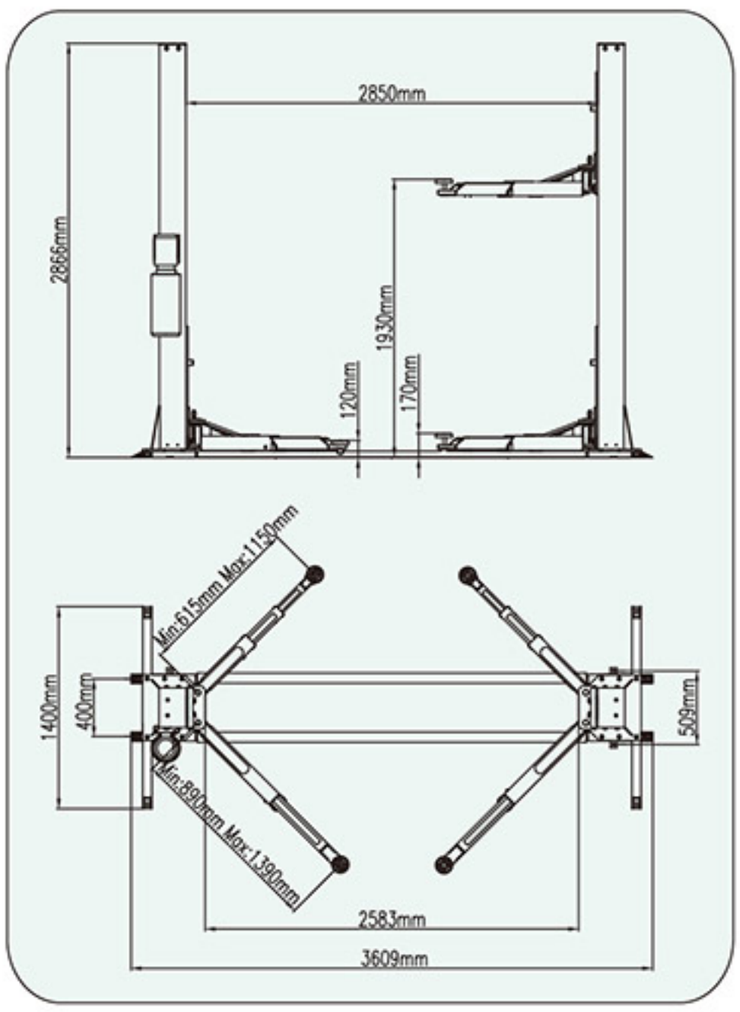

QJY240B 4t

- Manual safety locking system.
- Driven by dual hydraulic cylinders.
- Mechanical locking system, w/single point safety latches in each column.
- Chain type lifting system.
- Steel wire rope equalizing cables.
- Multi-voltage power supply is available for electrical requirements.
- Optional motors.
- Adjustable lift pads and adapters.
- Low profile floor-plate.
- Durable powder coat finish.

Mechanical Safety Lock

Model	Capacity	Moter performance	Electrical connection	Lifting time	Package size		N.W./G.W.	QTY/20'CY
QJY240B	4 t	2.2 kw	380V / 220V	50 sec.	1# 2855x470x720mm 2# 800x280x320mm	3# 3230x555x45mm	670 / 685 kgs	24 PCS
QJY240B-E	4 t	2.2 kw	380V / 220V	50 sec.	1# 2855x470x720mm 2# 800x280x320mm	3# 3230x555x45mm 4# 590x240x250mm	695 / 710 kgs	24 PCS

2 Post Base Plate

NEW PRODUCT

QJY230C-E 3t

- Fully automatic electric control panel.
- Driven by dual hydraulic cylinders.
- Chain type lifting system.
- Internal Electric locking mechanism, w/two point safety latches in each column.
- Automatic safety arm locks.
- Easy to operate up and down switches on electrical control box.
- Steel wire rope equalizing cables.
- Multi-voltage power supply is available for electrical requirements.
- Optional motors available.
- Adjustable lift pads and adapters
- Wide base platform for extra support.
- Durable powder coat finish.

Electric Safety Lock

CE

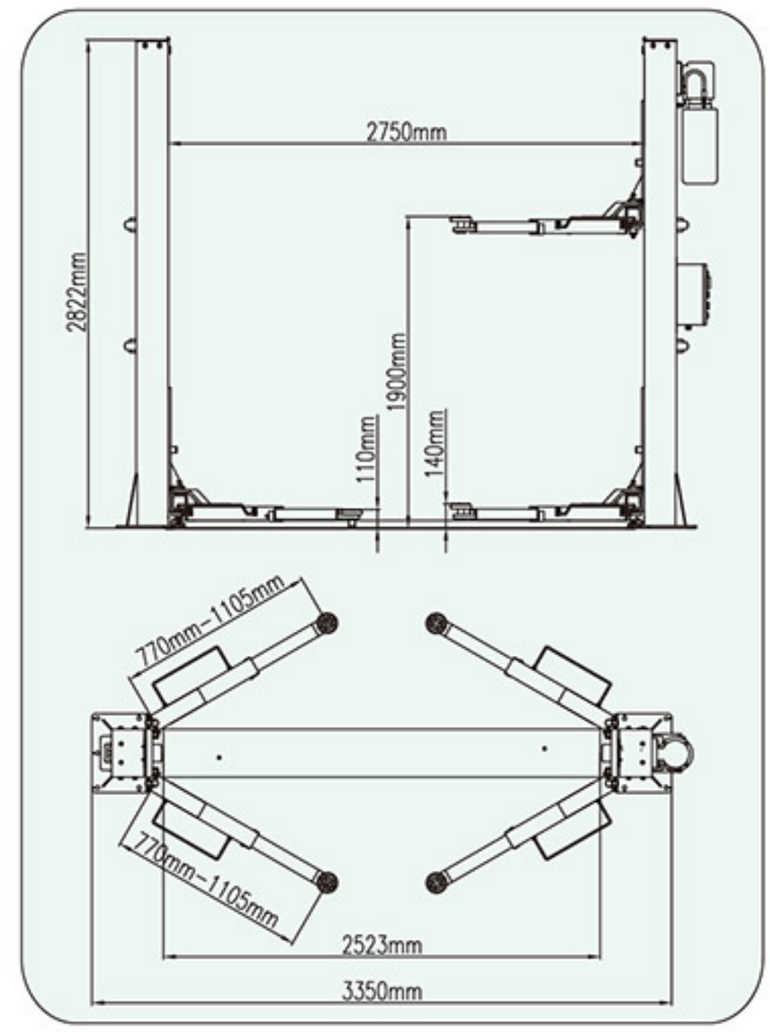

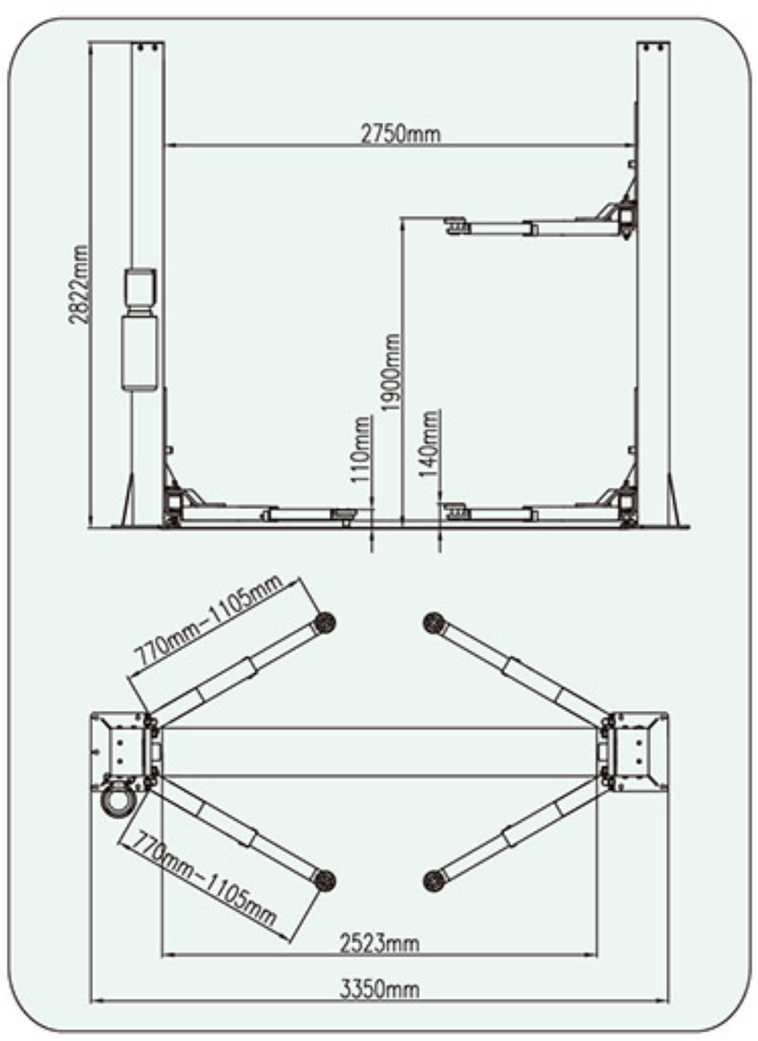

QJY230C 3t

- Manual safety locking system.
- Driven by dual hydraulic cylinders.
- Mechanical locking system, w/single point safety latches in each column.
- Chain type lifting system.
- Steel wire rope equalizing cables.
- Multi-voltage power supply is available for electrical requirements.
- Optional motors.
- Adjustable lift pads and adapters.
- Low profile floor-plate.
- Durable powder coat finish.

Mechanical Safety Lock

Model	Capacity	Moter performance	Electrical connection	Lifting time	Package size		N.W./G.W.	QTY/20'CY
QJY230C	3 t	2.2 kw	380V / 220V	50 sec.	1# 2840x470x720mm	2# 800x280x320mm	525 / 540 kgs	27 PCS
QJY230C-E	3 t	2.2 kw	380V / 220V	50 sec.	1# 2840x470x720mm 2# 800x280x320mm	3# 590x240x250mm	555 /570 kgs	27 PCS

2 Post Base Plate

NEW PRODUCT

QJY240C-E 4t

- Fully automatic electric control panel.
- Driven by dual hydraulic cylinders.
- Chain type lifting system.
- Internal Electric locking mechanism, w/two point safety latches in each column.
- Automatic safety arm locks.
- Easy to operate up and down switches on electrical control box.
- Steel wire rope equalizing cables.
- Multi-voltage power supply is available for electrical requirements.
- Optional motors available.
- Adjustable lift pads and adapters
- Wide base platform for extra support.
- Durable powder coat finish.

Electric Safety Lock

CE

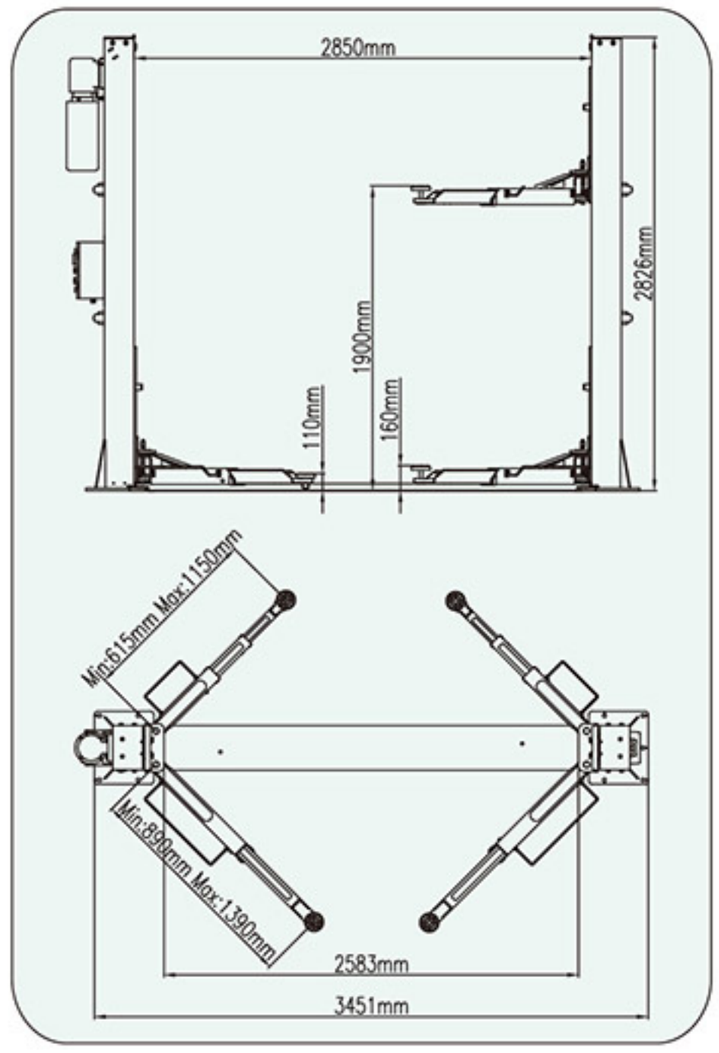

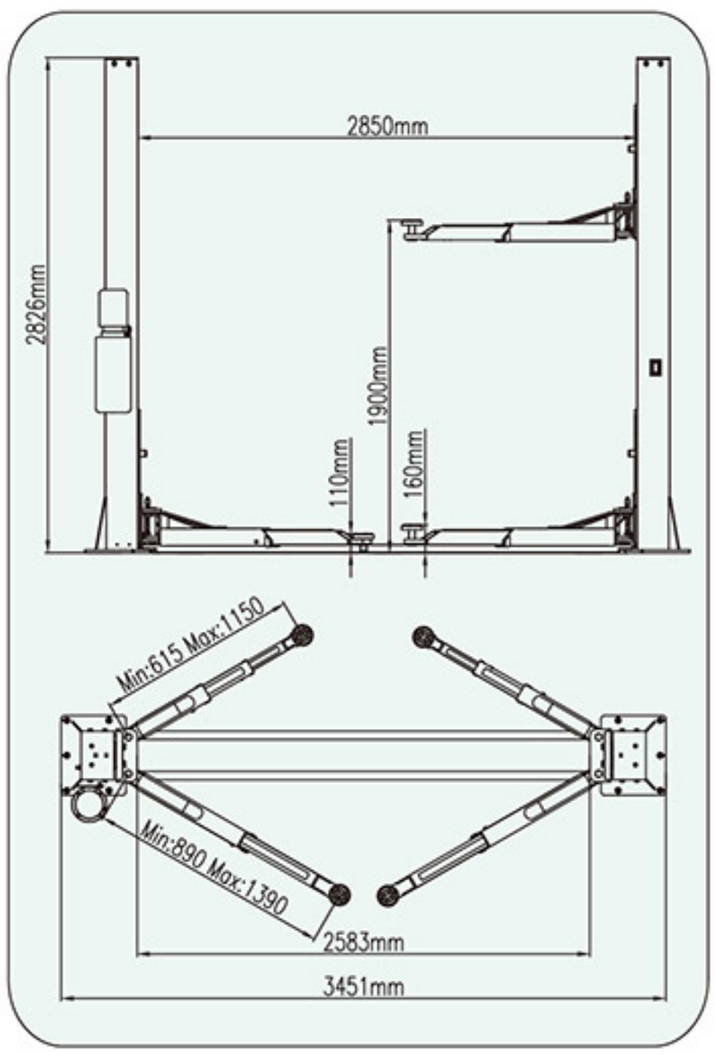

QJY240C 4t

- Manual safety locking system.
- Driven by dual hydraulic cylinders.
- Mechanical locking system, w/single point safety latches in each column.
- Chain type lifting system.
- Steel wire rope equalizing cables.
- Multi-voltage power supply is available for electrical requirements.
- Optional motors.
- Adjustable lift pads and adapters.
- Low profile floor-plate.
- Durable powder coat finish.

Mechanical Safety Lock

Model	Capacity	Moter performance	Electrical connection	Lifting time	Package size		N.W./G.W.	QTY/20'CY
QJY240C	4 t	2.2 kw	380V / 220V	50 sec.	1# 2840x470x720mm	2# 800x280x320mm	575 / 590 kgs	27 PCS
QJY240C-E	4 t	2.2 kw	380V / 220V	50 sec.	1# 2840x470x720mm 2# 800x280x320mm	3# 590x240x250mm	600 / 615 kgs	27 PCS

2 Post Base Plate

NEW PRODUCT

QJY240CA-S 4t

CE

- Single-point mechanical lock release system allows technician to disengage both columns simultaneously.
- Heavy-duty chain and dual hydraulic cylinder lifting system with cable synchronization.
- Telescoping screw pads minimize the need of extra requirements.
- Professional protective curtain.
- Rotational arms with inhibitor-frame.
- Multi-voltage power supply is available for electrical requirements.
- Durable powder coat finish.

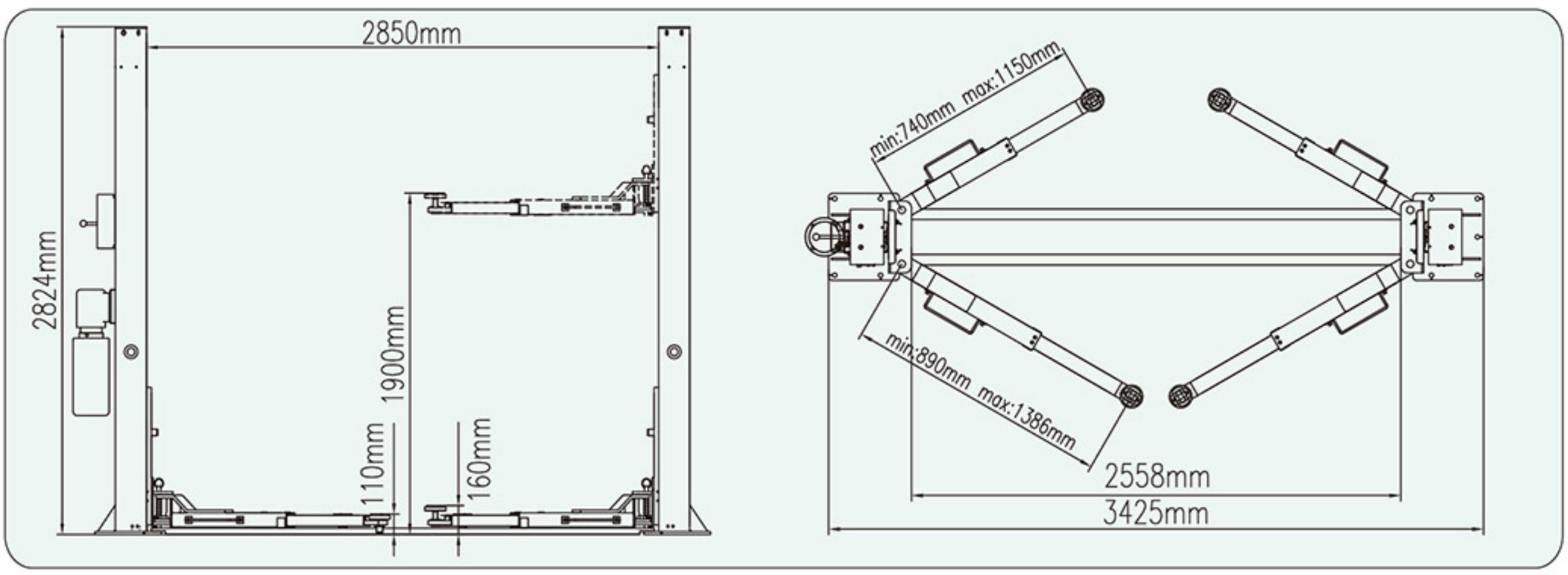

Model	Capacity	Stroke	Plate Height Min.	Overall Width	Package size	N.W./G.W.	QTY/20'CY
QJY240CA-S	4 t	110 mm	2824 mm	3425 mm	1# 2840x470x720 mm 2# 800x280x320 mm 3# 480x220x185mm	1# 562 / 575kg 2# 24.5 / 26kg 3# 8.5 / 9kg	27 PCS

www.tongrunjacks.com

2 Post Overhead Clearfloor

NEW PRODUCT

QJY240D-E 4t

- Fully automatic electric control panel.
- Driven by dual hydraulic cylinders.
- Chain type lifting system.
- Internal Electric locking mechanism, w/two point safety latches in each column.
- Automatic safety arm locks.
- Easy to operate up and down switches on electrical control box.
- Steel wire rope equalizing cables.
- Multi-voltage power supply is available for electrical requirements.
- Optional motors available.
- Adjustable lift pads and adapters
- Durable powder coat finish.
- No floor-plate restrictions.
- Overhead crossover beam.

Electric Safety Lock

CE

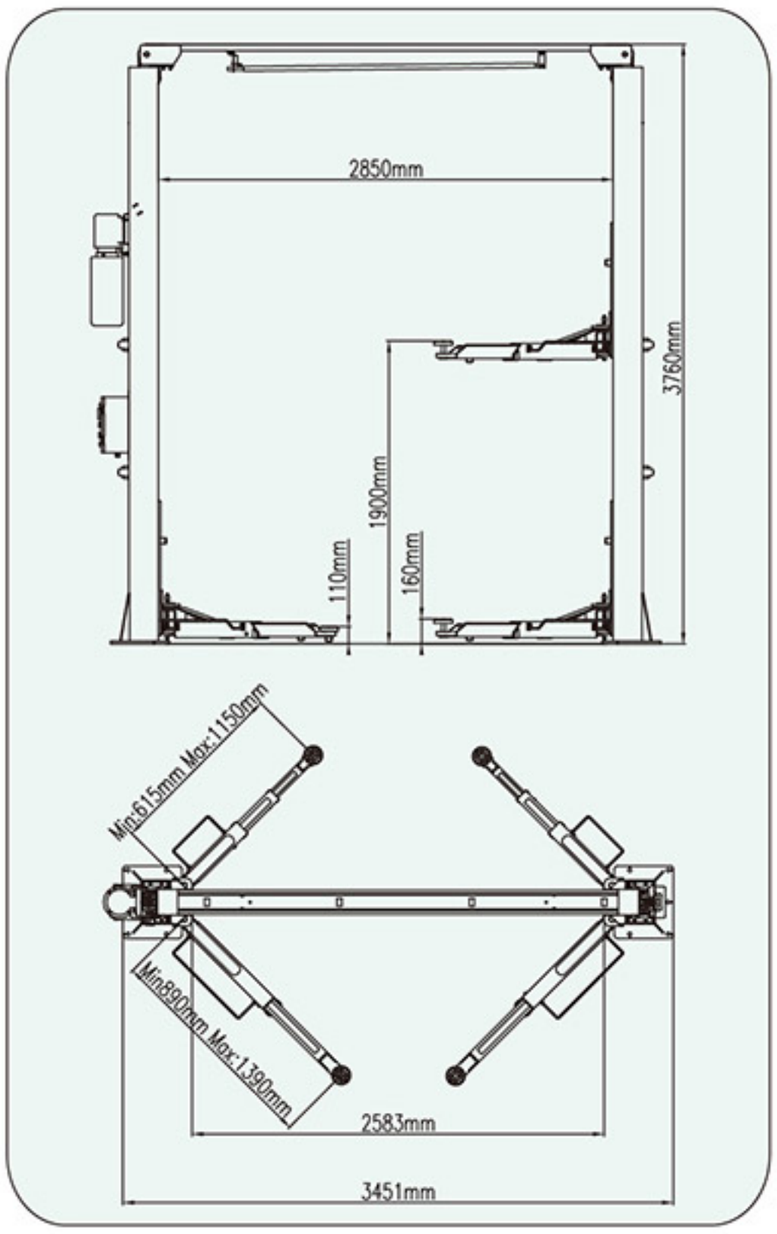

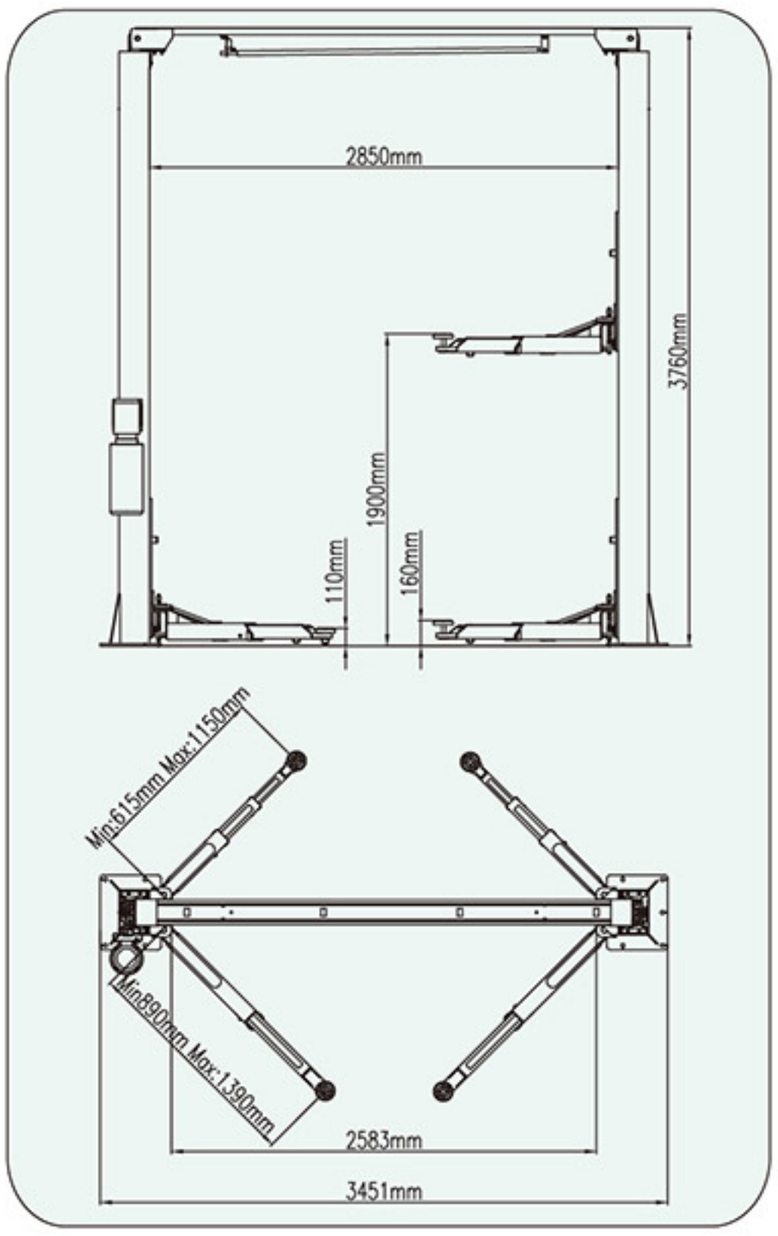

QJY240D 4t

- Manual safety locking system.
- Driven by dual hydraulic cylinders.
- Mechanical locking system, w/single point safety latches in each column.
- Chain type lifting system.
- Steel wire rope equalizing cables.
- Multi-voltage power supply is available for electrical requirements.
- Optional motors.
- Adjustable lift pads and adapters.
- No floor-plate restrictions.
- Overhead crossover beam.

Mechanical Safety Lock

Model	Capacity	Moter performance	Electrical connection	Lifting time	Package size		N.W./G.W.	QTY/20'CY
QJY240D	4 t	2.2 kw	380V / 220V	50 sec.	1# 3670x470x720mm	2# 800x280x320mm	635 / 650 kgs	15 PCS
QJY240D-E	4 t	2.2 kw	380V / 220V	50 sec.	1# 3650x470x720mm 2# 800x280x320mm	3# 590x240x250mm	660 / 675 kgs	15 PCS

2 Post Overhead Clearfloor

The ALI CERTIFIED TCE 10,000-lb. Overhead Commercial Lift is the newest and best solution that provides ample door opening clearance for entry to vehicles. Each lift is designed using a single piece column, a variable overhead cross-member, and extra tall carriages that all combine to create a very strong and reliable lift design.

INDEPENDENTLY TESTED ALI CERTIFIED AND VALIDATED ®

Registered by TORIN Inc.
Designed in USA, Made in China

Optional Overhead 14' Height Extender Kit Shown Is Not Included WIth Standard Lift

Dual Arm Configuration

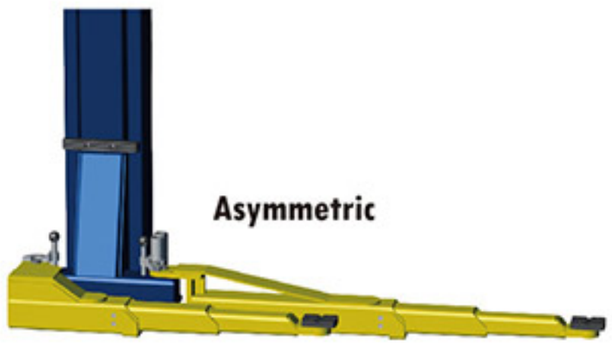

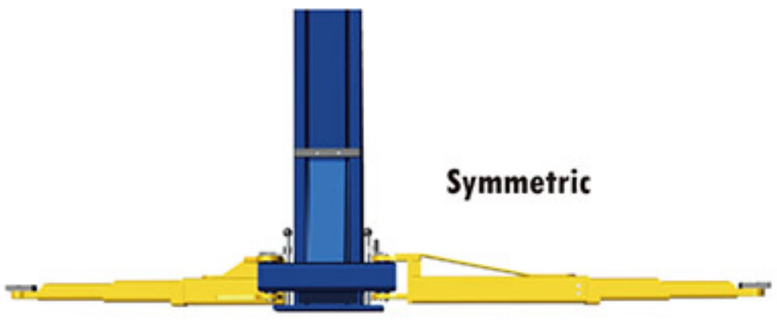

Compact Three-Stage Front and Rear Arm Designs

QJY250DX

FEATURES AND BENEFITS

10,000-lb. Lift capacity
- Single point lock release
- Dual direct drive hydraulic cylinders
- Oversized 57" tall lifting carriages
- Automatic arm restraints
- Truck adapter kit
- Triple telescoping arm design
- Steel aircraft quality equalizing cables
- Matted powder coat finish
- Max rise height with adapters 78-in. (1981mm)
- Three optional variable drive through clearances

• Lock Mechanism	- Manual
• Motor Phase(s)	- 1 Phase
• Volts	- 208-240
• Hertz	- 60
• Amps	- 25 Amps (4.4 kw)
• Time to Full Rise (seconds)	- 60
• Maximum operating hydraulic pressure developed upon lifting the rated capacity Manufacturer	- 2450 psi / 168.92 bar
• Warranty	- 2 Years

Specifications	US Imperial (in) (lbs)	Metric (mm) (kg)
Lift Capacity	- 10,000-lbs.	4,545-kg
Max Rise from the ground	- 72.75	1848mm
Lifting Range	- 68.70	1745mm
Lowest Clearance from the ground	- 4.05	103mm
Narrow Drive-Thru Clearance	- 88.15	2239mm
Medium Drive-Thru Clearance	- 94.06	2389mm
Wide Drive-Thru Clearance	- 99.96	2539mm
Standard Overall Height	- 143.7in 11.97ft	3650mm
Tall Overall Optional Height – NOT INCLUDED	- 166in 13.89ft	4235mm
Max Load Per Arm	- 2500-lbs.	1136-kg

Shipping Dimensions	US Imperial (in)	Metric (mm) (kg)
Lift Structure Weight	- 1893.26-lbs	860-kg
Shipping Dimensions L x W x H	141.9 x 22.4 x 37.6	3605 x 570 x 955 mm
Power Unit Weight	- 60-lbs	27.2-kg
Shipping Dimensions L x W x H	35.43 x 11 x 12.60	900 x 280 x 320mm
24" Height Extender Weight	- 167.55-lbs	76.2-kg
Shipping Dimensions L x W x H	30.3 x 17.3 x 16.9	770 x 440 x 430mm
Container QTY	- QTY/20' CY - NA	QTY/40' CY - 22

Chrome Plated Cylinder Rods and Pistons

Lift Pad Extender Heights: 1.5-in, 3-in, 6-in

ETL Rated Power Unit

Arms Automatically Engage

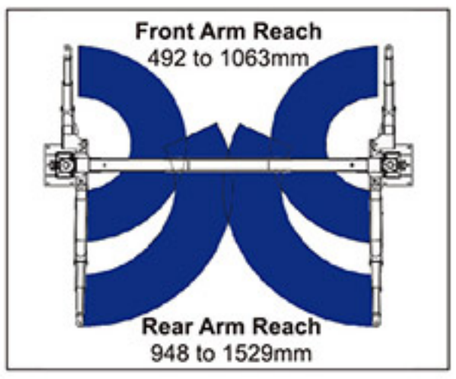

Optional: 2FT Height Extender Kit

Low Profile Arms

www.tongrunjacks.com

Clearfloor Two Post Lift

QJY245DS

- Manual safety locking system.
- Driven by dual hydraulic cylinders.
- Lifting carriages are raised by direct hydraulic force.
- Mechanical locking system, w/single point safety latches in each column.
- Steel wire rope equalizing cables.
- Multi-voltage power supply is available for electrical requirements.
- Optional motors.
- Fixed lift pads and adapters.
- No floor-plate restrictions.
- Overhead crossover beam.
- Durable powder coat finish.

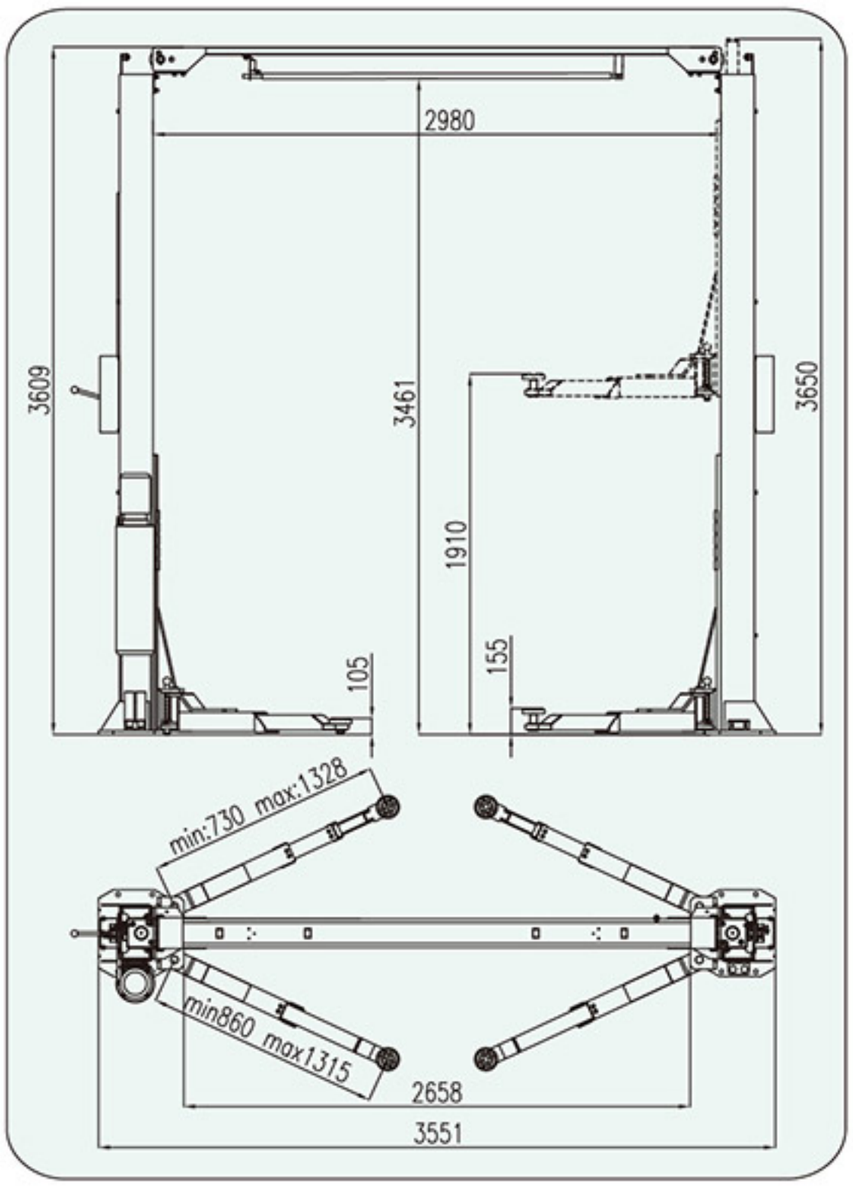

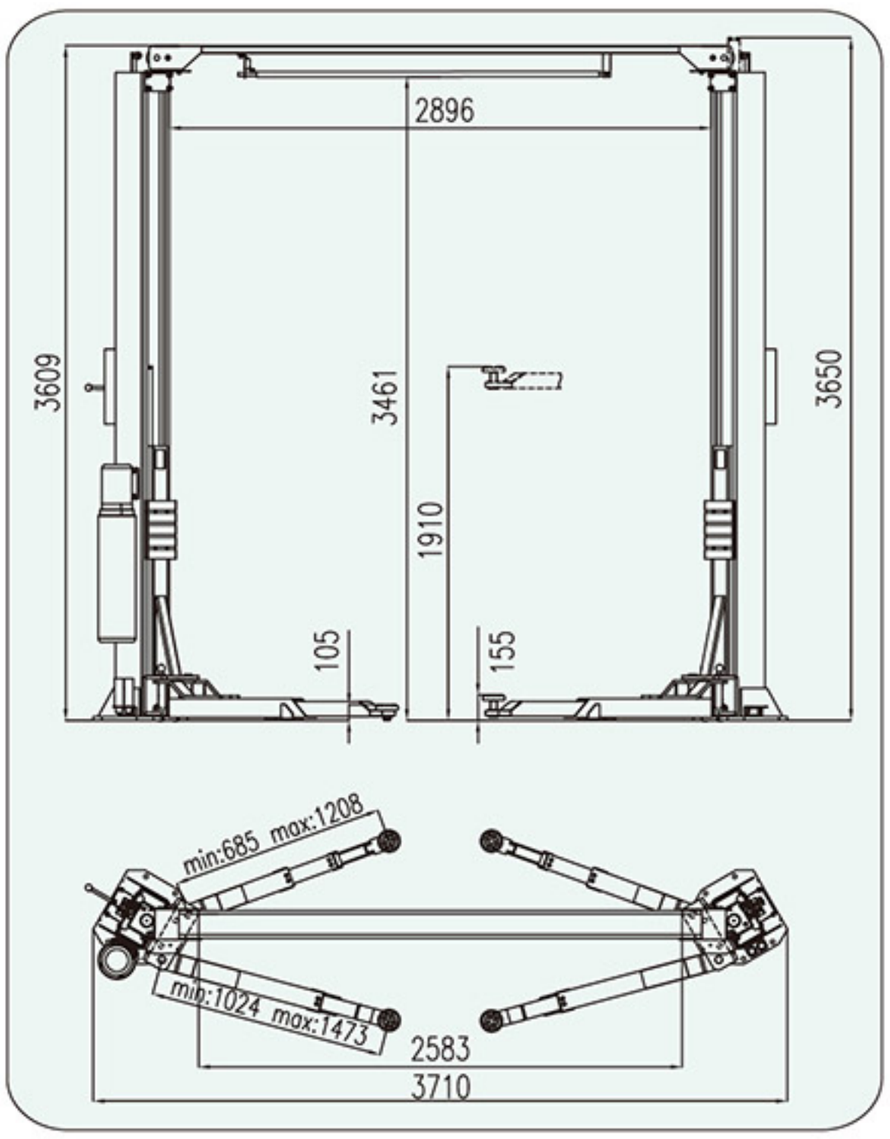

QJY245DA

- Manual safety locking system.
- Driven by dual hydraulic cylinders.
- Lifting carriages are raised by direct hydraulic force.
- Mechanical locking system, w/single point safety latches in each column.
- Steel wire rope equalizing cables.
- Multi-voltage power supply is available for electrical requirements.
- Optional motors.
- Fixed lift pads and adapters.
- No floor-plate restrictions.
- Overhead crossover beam.
- Durable powder coat finish.

Model	Capacity	Moter performance	Electrical connection	Lifting time	Package size		N.W./G.W.	QTY/20'CY
QJY245DA	4.5 t	2.2 kw	380V / 220V	60 sec.	1# 3580x500x880mm	2# 900x280x320mm	765/790 kgs	8 PCS
QJY245DS	4.5 t	2.2 kw	380V / 220V	60 sec.	1# 3580x500x880mm	2# 900x280x320mm	760/785 kgs	8 PCS

Clearfloor Two Post Lift

NEW PRODUCT

QJY260D 6t

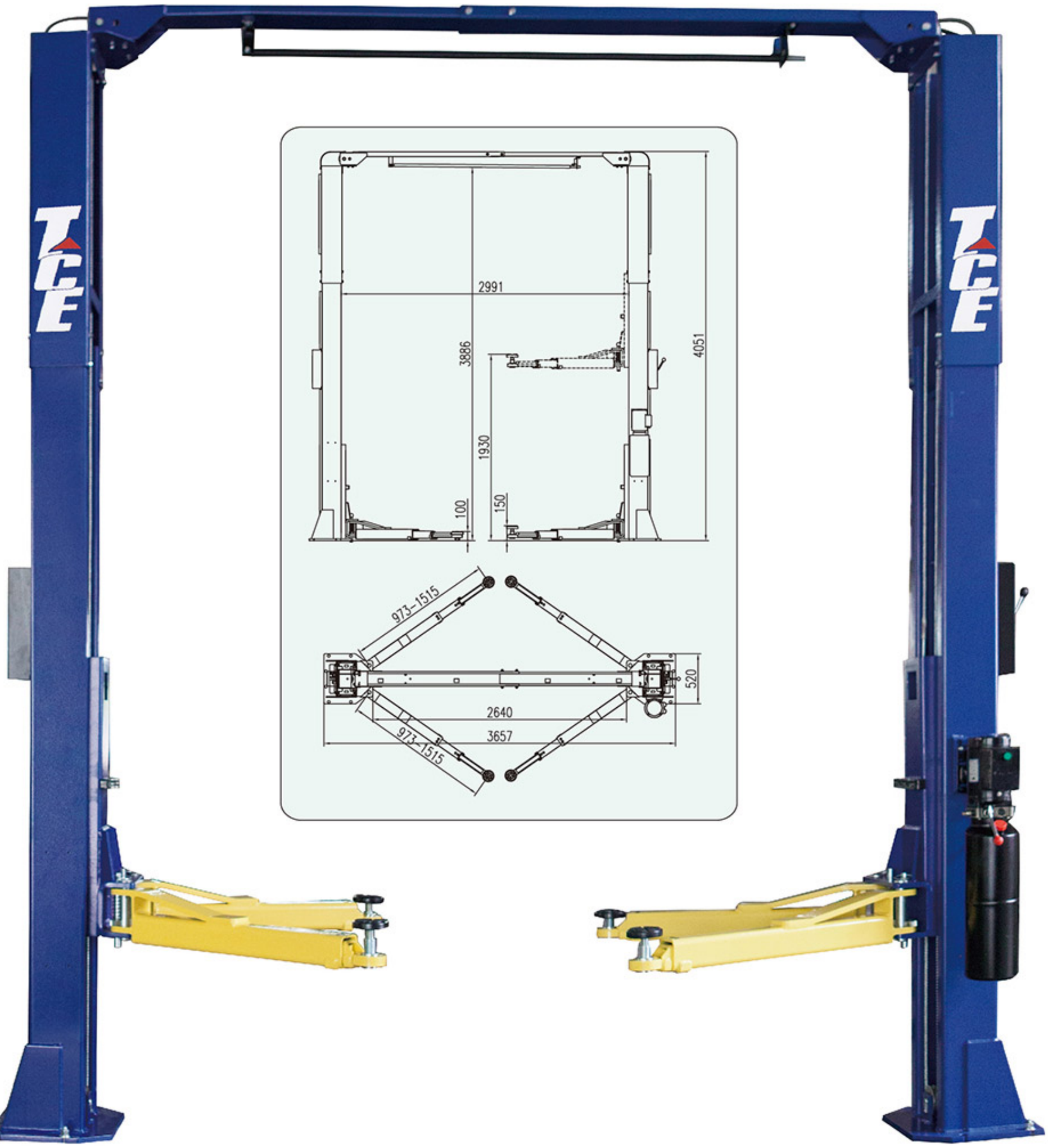

- Clear floor design for easy movement of maintenance equipment.
- Adjustable lifting pad with min height 100mm for sports vehicles.
- Inside widths 2991mm suitable for wide vehicles like SUV, MPV etc.
- One side safety locks release.
- Lifting height 1930mm, suitable for different operators.
- Explosion-proof valve.
- Hydraulic hose cover.

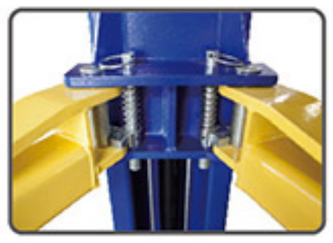
Strong carriage and arm

Round screw-up lifting pad and triple telescope straight arm

Extension post

Model	Capacity	Max. Lifting Height	Plate Height Min.	Overall Size (Height x Width)	Power	Power Supply	Package size	N.W./G.W.	QTY/20'CY
QJY260D	6 t	1930 mm	100 mm	4051 x 3657 mm	3 kw	220V / 380V	1# 3060x530x1090mm 2# 980x280x320mm	1051 / 1077 kg	8 PCS

Four Post Lift

QJY4030
QJY4040
QJY4040H

REPLACE WORDING:
- Ladder lock system
- Commercial grade synchronizing safety latch system offers a unique two position locking mechanism
- Air locking system
- Detachable tilting approach ramp
- Large heavy-duty 3" cylinder
- Aircraft quality lifting cables
- Matted powder coat finish

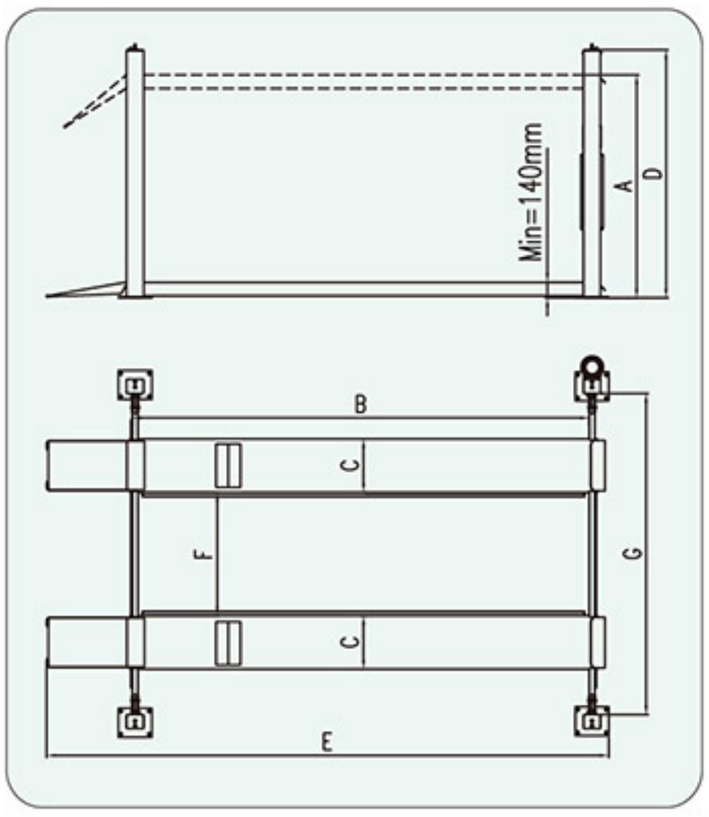

Optional accessories

QJY-CHB

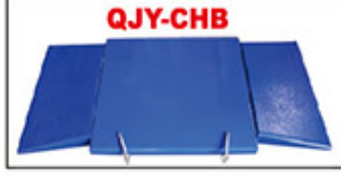

QJY4030.16

QJY-JB.0

QJY-ZJP

QJYJ020
Rolling Bridge Jack
Height:360mm

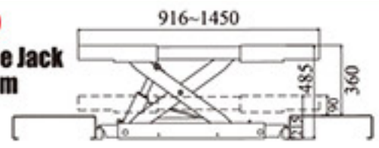

		A.	B.	C.	D.	E.	F.	G.							
Model	Capacity	Max ground clearance	Table length	Table width	Overall height	Overall width	Clearance between tabels	Clearance between columns	Rise time	Drop time	Power of moter	Power of supply	Package size	N.W/G.W	QTY/20'CY
QJY4030	3 t	1900mm	4216mm	480mm	2230mm	5204mm	962mm	2337mm	60 sec	45 sec	2.2 kw	380V/220V	4376x 530x 710mm	705/725kg	12PCS
QJY4040	4t	1900mm	4175mm	480mm	2230mm	5163mm	1120mm	2715mm	60 sec	45 sec	2.2 kw	380V/220V	4339x530x710mm	780/800kg	12PCS
QJY4040H	4 t	2230mm	5080mm	480mm	2580mm	6068mm	1120mm	2715mm	60 sec	45 sec	2.2 kw	380V/220V	5240x 530x 710mm	895/915kg	12PCS

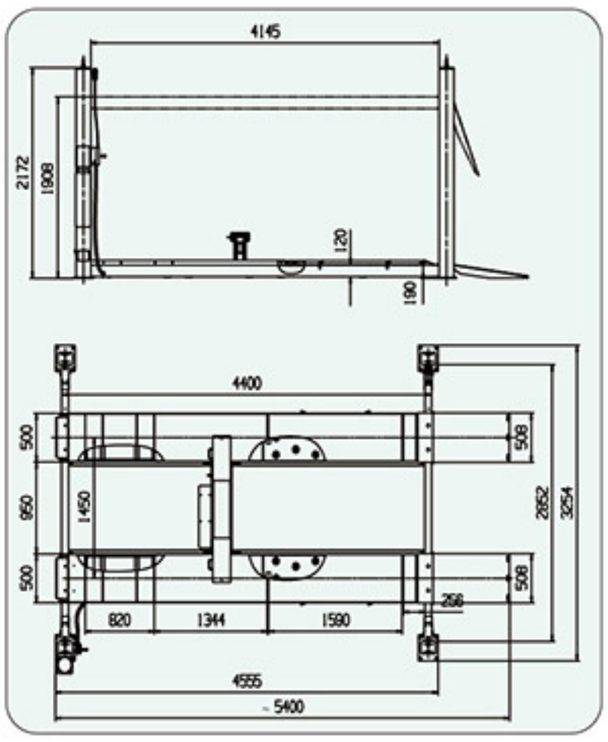

The detachable nylon blocks make the machine easier to be maintained

QJY440

Optional accessories

QJYJ020
Rolling Bridge Jack
Height:360mm

QJY-ZJP

Features:
- Alignment kit equips with high strength steel balls, extend service life.
- Flat runway.
- Pneumatic unlock system, easy to operate.
- Driven by hydraulic cylinders, transmission by wire rope, low noise.
- Wire Rope fracture proof system , explosion proof devices of hydraulic system , more secure and reliable.
- Second lift optional.

Model	Capacity	Min ground clearance	Max ground clearance	Rise time	Drop time	Power of moter	Power of supply	Tabel length	Tabel width	Package size	N.W./G.W.	QTY/20'CY
QJY440	4 t	190 mm	1908 mm	60 sec.	40 sec.	2.2 kw	380V / 220V	4400 mm	500 mm	1# 4530x560x820 mm 2# 900x280x320 mm	1150/1190 kgs	8 PCS

Four Post Lift

QJY440-E

The detachable nylon blocks make the machine easier to be maintained

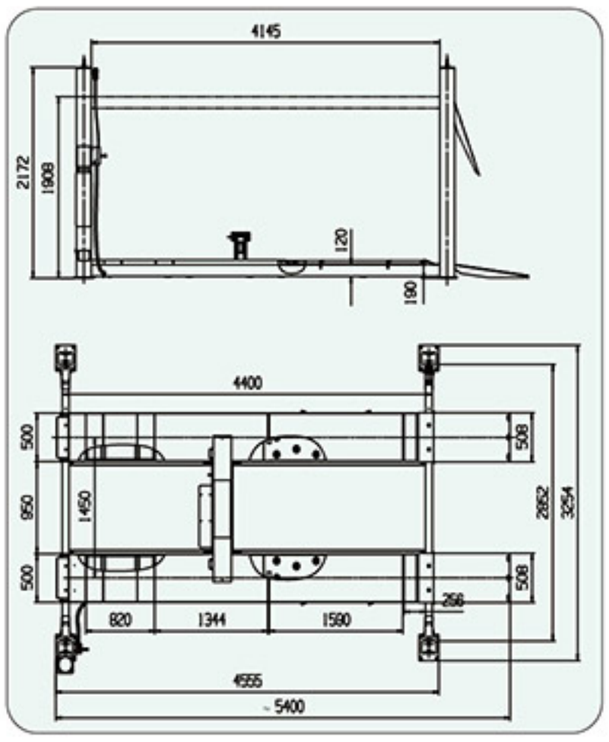

Features:
- Alignment kit equips with high strength steel balls, extend service life.
- Flat runway.
- Pneumatic unlock system, easy to operate.
- Driven by hydraulic cylinders, transmission by wire rope, low noise.
- Wire Rope fracture proof system , explosion proof devices of hydraulic system , more secure and reliable.
- Second lift optional.

Optional accessories

Model	Capacity	Min ground clearance	Max ground clearance	Rise time	Drop time	Power of moter	Power of supply	Tabel length	Tabel width	Package size	N.W./G.W.	QTY/20'CY
QJY440-E	4 t	190 mm	1908 mm	60 sec.	40 sec.	2.2 kw	380V / 220V	4400 mm	500 mm	1# 4530x560x820 mm 2# 900x280x320 mm	1150/1190 kgs	8 PCS

Single Post Lift

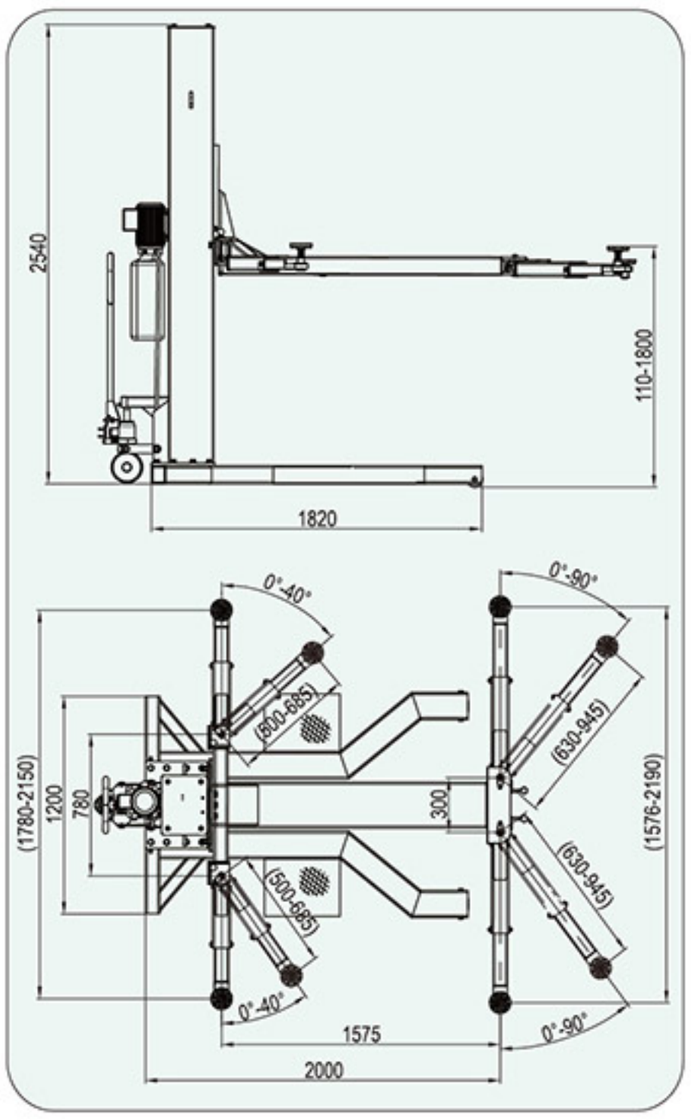

QJY2.5-H

Features:
- Manual single side release system.
- Single post design make service more convenient.
- Moveable single post lift with adjustable arm length.
- Rubber door protection effectively avoid unexpected injuries and damages.
- Cover for post ensure good outlooking.
- It has been proofed by dynamic test with 125% of rated capacity and static test with 150% of rated capacity.

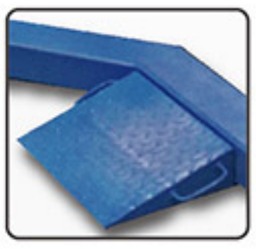

Model	Lifting capacity	Max lifting height	Low lifting height	Lifting/ Lowering time	Power supply	Motor power	Fuse protection	Package size	Weight	QTY/20'CY
QJY2.5-H	2500 kgs	1800 mm	110 mm	50/20 sec.	380V/220V	2.2 kw	10 A	1# 2070x1370x450 mm 2# 2450x520x550mm 3# 750x330x230 mm	750 kgs	16 PCS

Double Scissor In-ground Lift

QJYJ30-ZW

Features:
- Ready to use directly out of the box.
- Low profile extendable platform design, for a wide range of service.
- Pneumatic looking system.

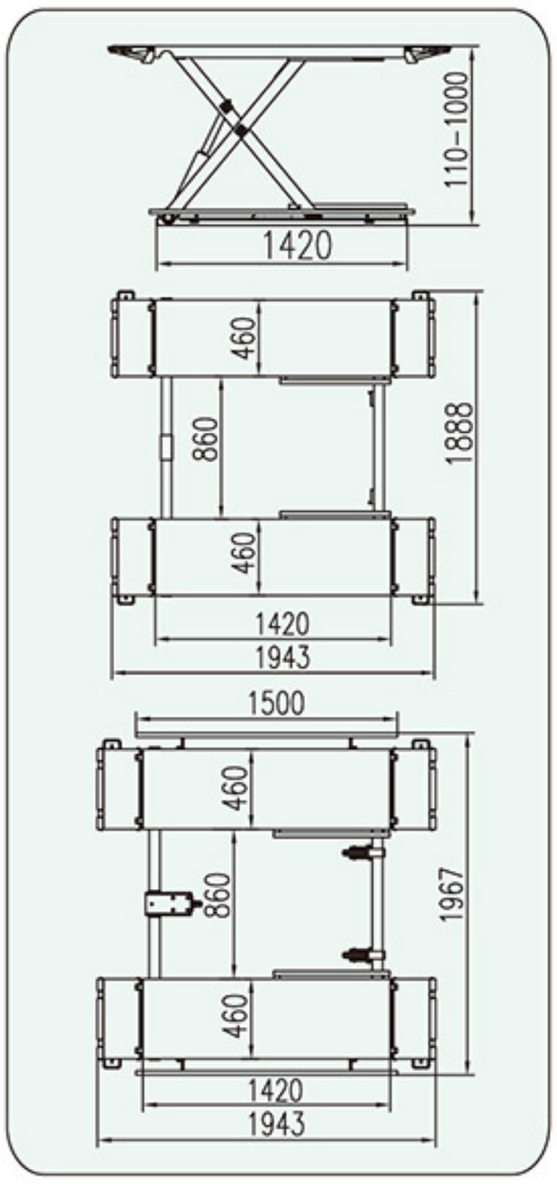

Model	Capacity	Min ground clearance	Max ground clearance	Rise time	Drop time	Power of moter	Power of supply	Tabel length	Tabel width	Package size	N.W./G.W.	QTY/20'CY
QJYJ30-ZW	3 t	110mm	1000mm	30 sec.	25 sec.	2.2 kw	380V / 220V	1420mm	460mm	1#1960x1950x190mm 2#640x520x1170mm	470/480 kgs	22 PCS

QJYJ30E-ZW

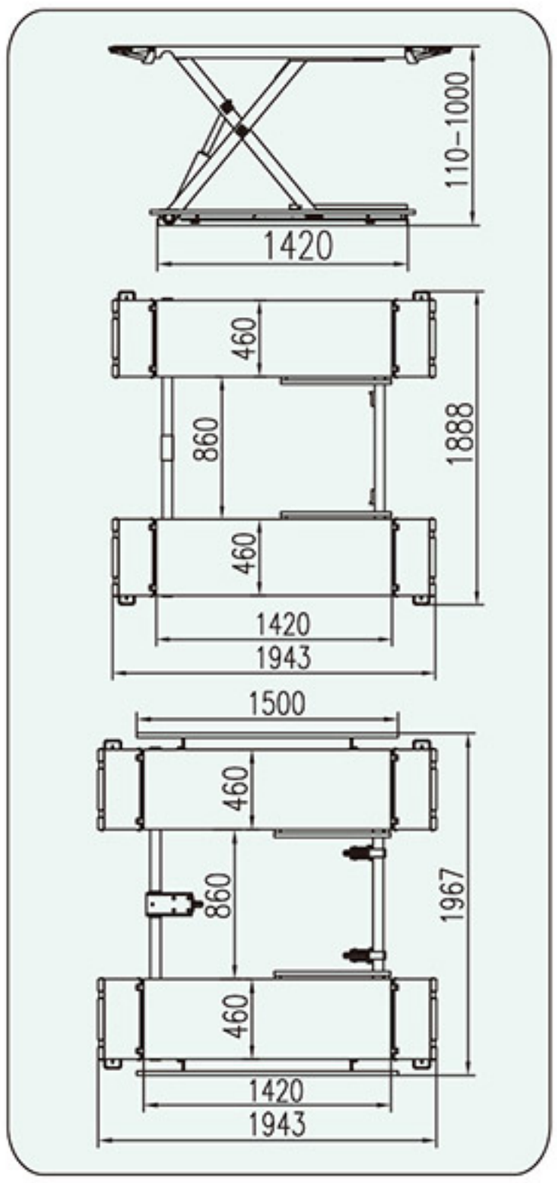

Features:
- Ready to use directly out of the box.
- Low profile extendable platform design, for a wide range of service.
- Electric looking system.

Model	Capacity	Min ground clearance	Max ground clearance	Rise time	Drop time	Power of moter	Power of supply	Tabel length	Tabel width	Package size	N.W./G.W.	QTY/20'CY
QJYJ30E-ZW	3 t	110mm	1000mm	30 sec.	25 sec.	2.2 kw	380V / 220V	1420mm	460mm	1#1960x1950x190mm 2#640x520x1170mm	470/480 kgs	22 PCS

Double Scissor In-ground Lift

CE

QJYJ35D

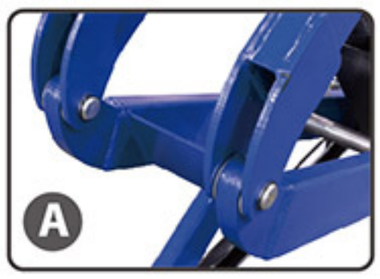

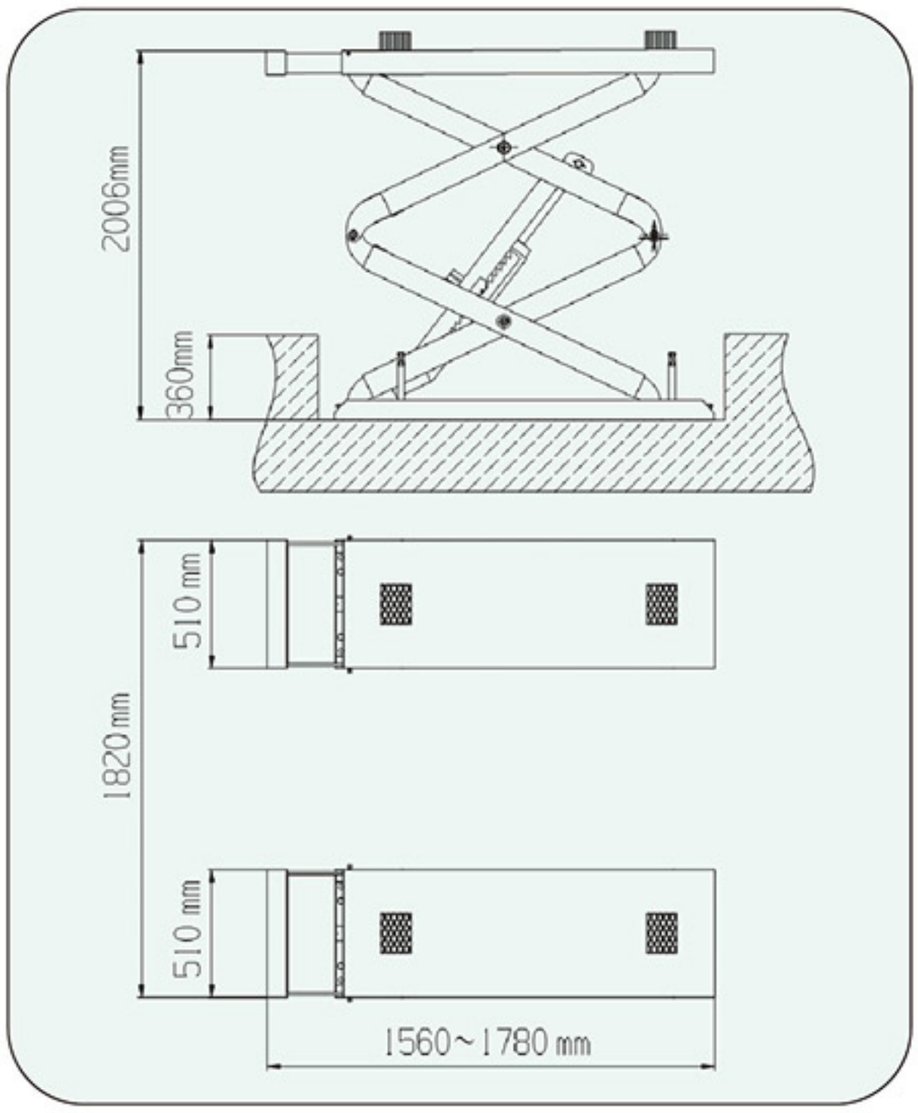

Features:

- It takes up little space.
- Pneumatic unlocking.Adopt pneumatic safety lock structure (with synchronous unlocking safety device)
- Fast lifting speed with quiet working condition.
- Safe and reliable.
- The retractable platform is suitable for various vehicle maintenance.
- Optional height limit switch.
- Pass 115% Gn dynamic overload and 150% Gn static overload test.
- Hydraulic double cylinders (series main and auxiliary cylinders).
- 24V safety voltage control, through the control cabinet panel to control the rise, fall, and pneumatic unlocking.
- The fixed position of the cylinder is modularized, which is convenient for disassembly and maintenance.

Model	Capacity	Min ground clearance	Max ground clearance	Rise time	Drop time	Air pressure	Power of moter	Power of supply	Control voltage	Tabel length	Tabel width	Package size	N.W./G.W.	QTY/20'CY
QJYJ35D	3.5 t	360 mm	2006 mm	40-60 sec.	50-60 sec.	0.4-0.6 Mpa	50 HZ 2.2 kw	220V 380V	24V-DC	1560-1780 mm	510 mm	1# 1590x540x930mm 2# 1310x380x500mm	1# 683/695kg 2# 52/75kg	20 PCS

Low Profile Scissor Lift

CE

QJYJ30-CB

Features:

- Easy installation.
- Four cylinder design, more smoothly.
- Extendable platform design, wide range of services.
- Mechanical locking device safe and reliable.
- Pneumatic unlocked and low noise.
- Design of High Strength structure to ensure security.

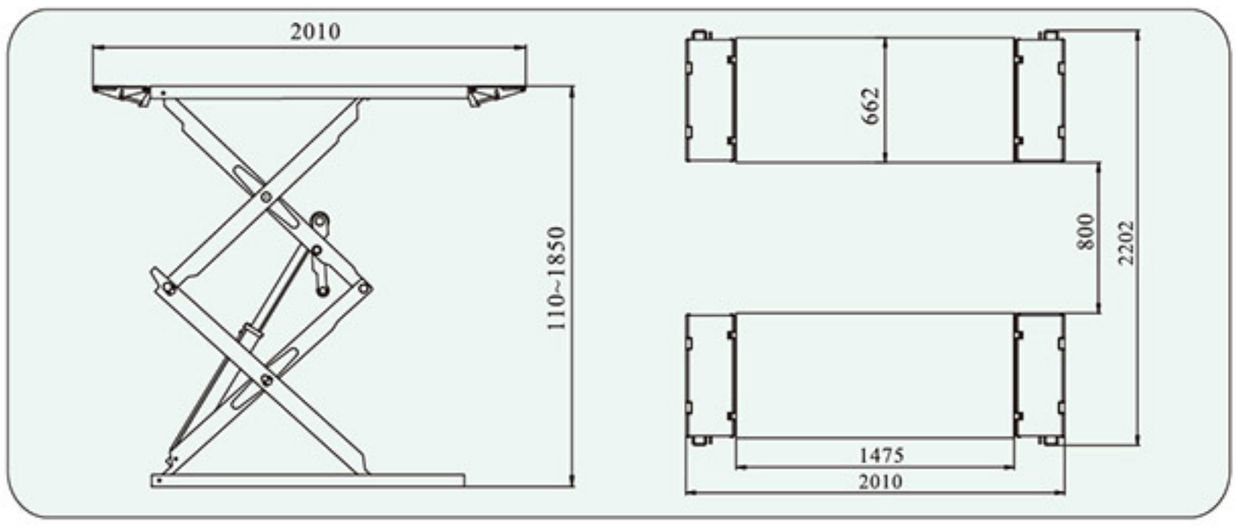

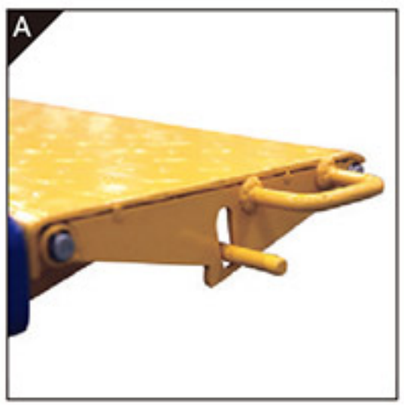

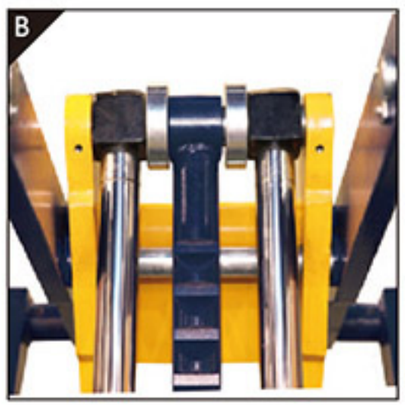

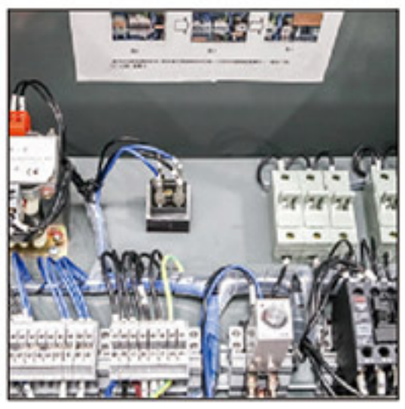

Model	Capacity	Min ground clearance	Max ground clearance	Rise time	Drop time	Power of moter	Power of supply	Tabel length	Tabel width	Package size	N.W./G.W.	QTY/20'CY
QJYJ30-CB	3 t	110mm	1850mm	60 sec.	45 sec.	2.2 kw	380V / 220V	1475mm	662mm	1#2010x700x420mm 2#1180x580x470mm	910/925 kgs	24 PCS

Wheel Alignment Scissor Lift Underground Type

CE

QJYJ40F-TR 4t

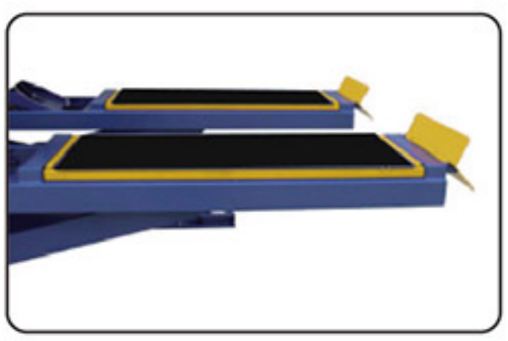

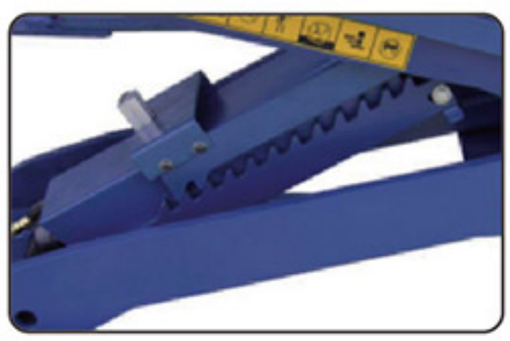

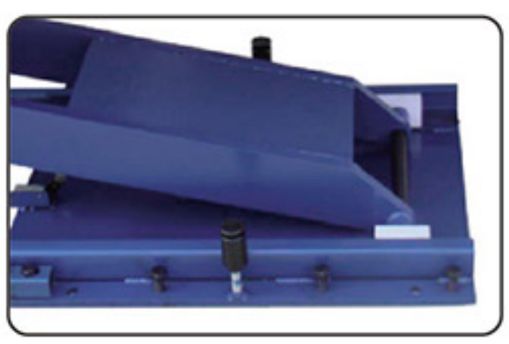

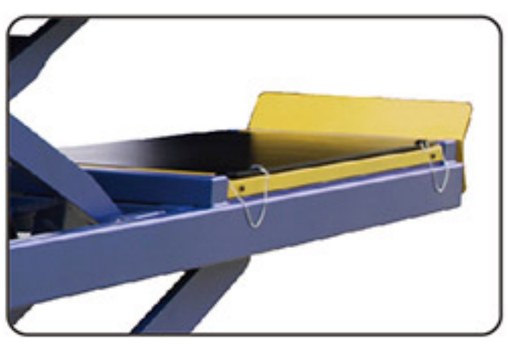

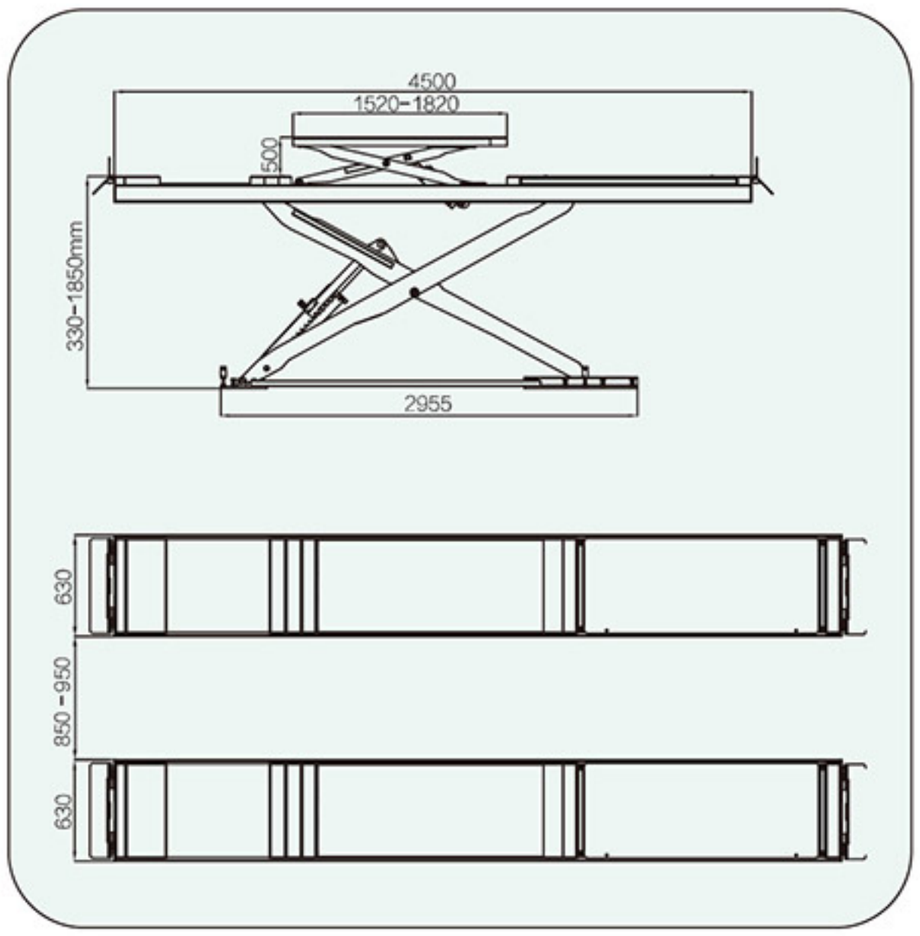

Features:

- Turn plate is mobile and available for various kind of cars.
- All the seal kits of cylinder, ball valves are import from Italy.
- The hydraulic oil cylinder is import from Taiwan, and the inner wall of the oil cylinder is treated with mirror surface to ensure that the oil cylinder does not leak oil and that both sides are synchronized
- 24V control system and limited switch.
- Platform length is 4500mm
- 4 Ton capacity underground type, save working space.

Model	Lifting weight	Secondary lifting weight	Max. lifting weight	Secondary Max. lifting weight	Motor voltage	Power	Working environment temperature	Humidity of working environment	Noise	N.W./G.W.	QTY/20'CY
QJYJ40F-TR	4000kgs	3000kgs	1850 mm	500 mm	220V/380V 1ph/3ph	2.2 kw	5~40°C	30~95%	<76db(A)	2180 / 2115 kgs	9 PCS

Wheel Alignment Scissor Lift

QJYJ40CBZ-TR 4t

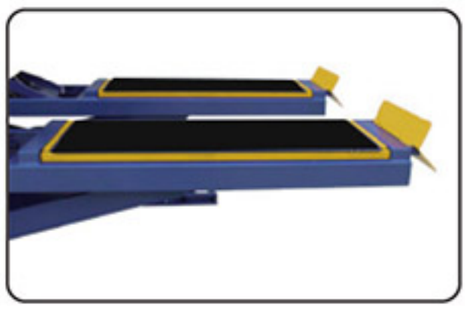

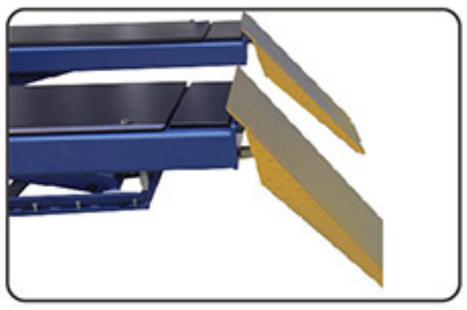

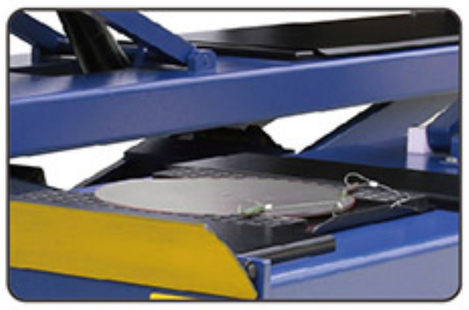

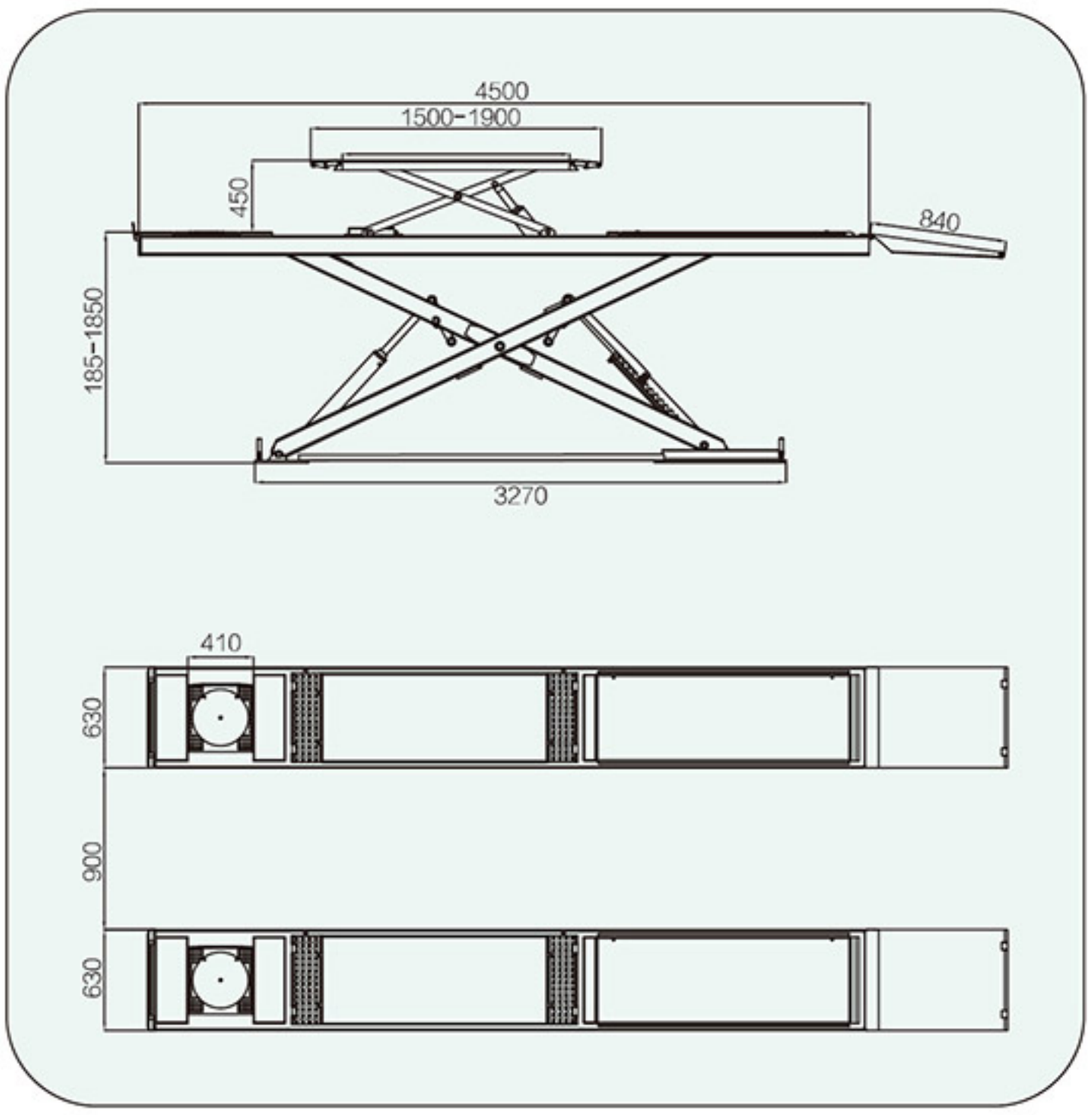

Features:

- On ground design, standard 3D alignment turn plate.
- Full set of cylinder seals, ball valves imported from Italy.
- The hydraulic oil cylinder is import from Taiwan, and the inner wall of the oil cylinder is treated.
- With mirror surface to ensure that the oil cylinder does not leak oil and that both sides are synchronized.
- 24V control system, 24V limited switch device.
- 190mm lowest height on ground and the platform length is 4500mm

Model	Lifting weight	Secondary lifting weight	Max. lifting weight	Secondary Max. lifting weight	Motor voltage	Power	Working environment temperature	Humidity of working environment	Noise	N.W./G.W.	QTY/20'CY
QJYJ40CBZ-TR	4000kgs	3000kgs	1850 mm	450 mm	220V/380V 1ph/3ph	2.2 kw	5~40°C	30~95%	<76db(A)	2240/2275 kgs	9 PCS

Car Tire Changer

TRE-600 CE

Semi-automatic side swing arm

Technical Specification

Motor power	0.75 kw/0.55 kw/1.1 kw
Power supply	220 V/400 V/110 V
Max.wheel diameter	41"(1040 mm)
Max.wheel width	14"(355 mm)
Ouside clamping	10"~17"
Inside clamping	12"~20"
Air supply	8 bar
Bead breaker force	2500 kgs
N.W./G.W.	167/190 kgs
Package size	960x760x880 mm
QTY/20'CY	36 PCS

TRE-200 CE

Semi-automatic side swing arm

Technical Specification

Motor power	0.75 kw/0.55 kw/1.1 kw
Power supply	220 V/400 V/110 V
Max.wheel diameter	38"(960 mm)
Max.wheel width	13"(330 mm)
Ouside clamping	10"~18"
Inside clamping	12"~20"
Air supply	8 bar
Bead breaker force	2500 kgs
Noise level	<70 db
Package size	960x760x880 mm
N.W/G.W.	195/210 kgs
QTY/20'CY	36 PCS

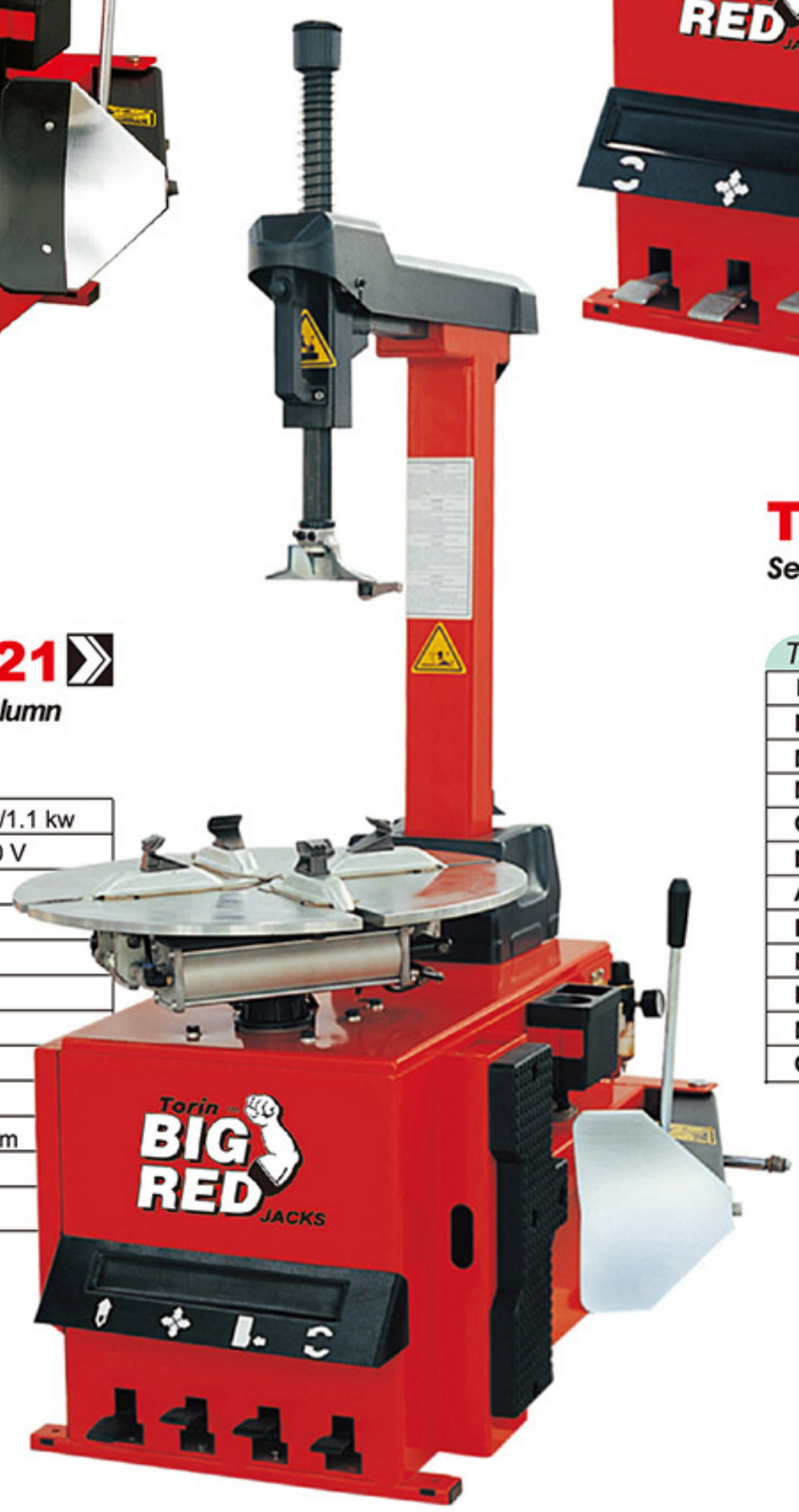

CE TRE-221

Full automatic pneumatic tilting column

Technical Specification

Motor power	0.75 kw/0.55 kw/1.1 kw
Power supply	220 V/400 V/110 V
Max.wheel diameter	41"(1040 mm)
Max.wheel width	14"(355 mm)
Ouside clamping	10"~22"
Inside clamping	12"~24"
Air supply	8 bar
Bead breaker force	2500 kgs
Noise level	<70 db
Package size	960x760x930 mm
N.W/G.W.	205/217 kgs
QTY/20'CY	36 PCS

Car Tire Changer

TRE-2011

Semi-automatic side swing arm

Technical Specification

Motor power	0.75 kw/0.55 kw/1.1 kw
Power supply	220 V/400 V/110 V
Max.wheel diameter	41"(1040 mm)
Max.wheel width	14"(355 mm)
Ouside clamping	10"~21"
Inside clamping	12"~24"
Air supply	8 bar
Bead breaker force	2500 kgs
N.W./G.W.	210/229 kg
Package size	960x760x1030 mm
QTY/20'CY	36 PCS

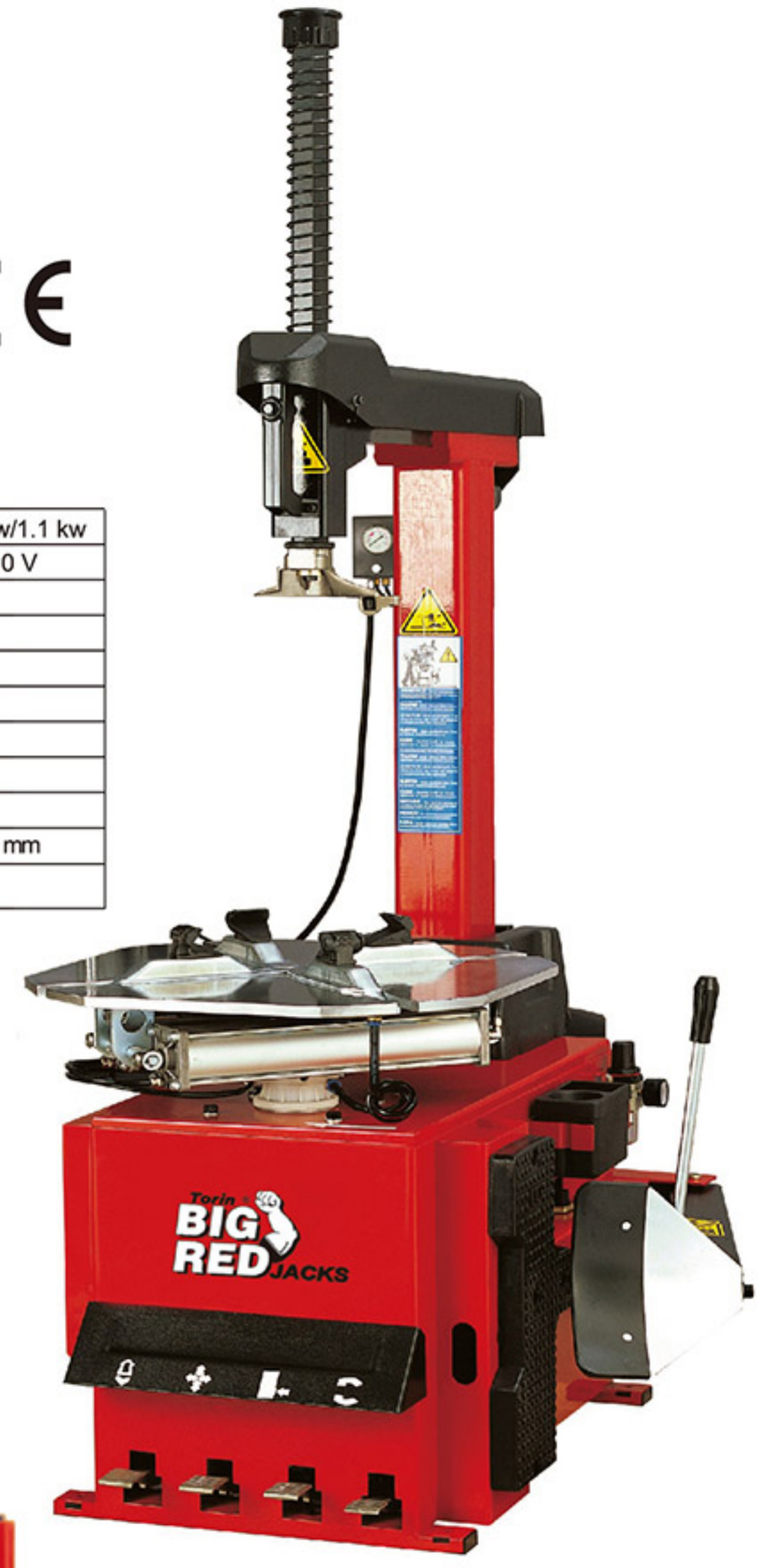

TRE-221A

Full automatic pneumatic tilting column with Air Tank

Technical Specification

Motor power	0.75 kw/0.55 kw/1.1 kw
Power supply	220 V/400 V/110 V
Max.wheel diameter	41"(1040 mm)
Max.wheel width	14"(355 mm)
Ouside clamping	10"~21"
Inside clamping	12"~24"
Air supply	8 bar
Bead breaker force	2500 kgs
N.W./G.W.	210/234 kgs
Package size	960x760x1030 mm
QTY/20'CY	36 PCS

TRE-209

Semi-automatic side swing arm with simple left help arm

Technical Specification

Motor power	0.75 kw/0.55 kw/1.1 kw
Power supply	220 V/400 V/110 V
Max.wheel diameter	45"(1143 mm)
Max.wheel width	16"(406 mm)
Ouside clamping	12"~24"
Inside clamping	14"~26"
Air supply	8 bar
Bead breaker force	2500 kgs
Noise level	<70 db
Package size	1130x900x1030 mm
N.W/G.W.	238/276 kgs
QTY/20'CY	24 PCS

Car Tire Changer

TRE-2098

CE

Semi-automatic side swing arm with simple left help arm

Technical Specification

Motor power	0.75 kw/0.55 kw/1.1 kw
Power supply	220 V/400 V/110 V
Max.wheel diameter	45"(1143 mm)
Max.wheel width	16"(406 mm)
Ouside clamping	12"~26"
Inside clamping	14"~28"
Air supply	8 bar
Bead breaker force	2500 kgs
N.W/G.W.	254/310 kgs
Package size	1130x900x1030 mm
QTY/20'CY	24 PCS

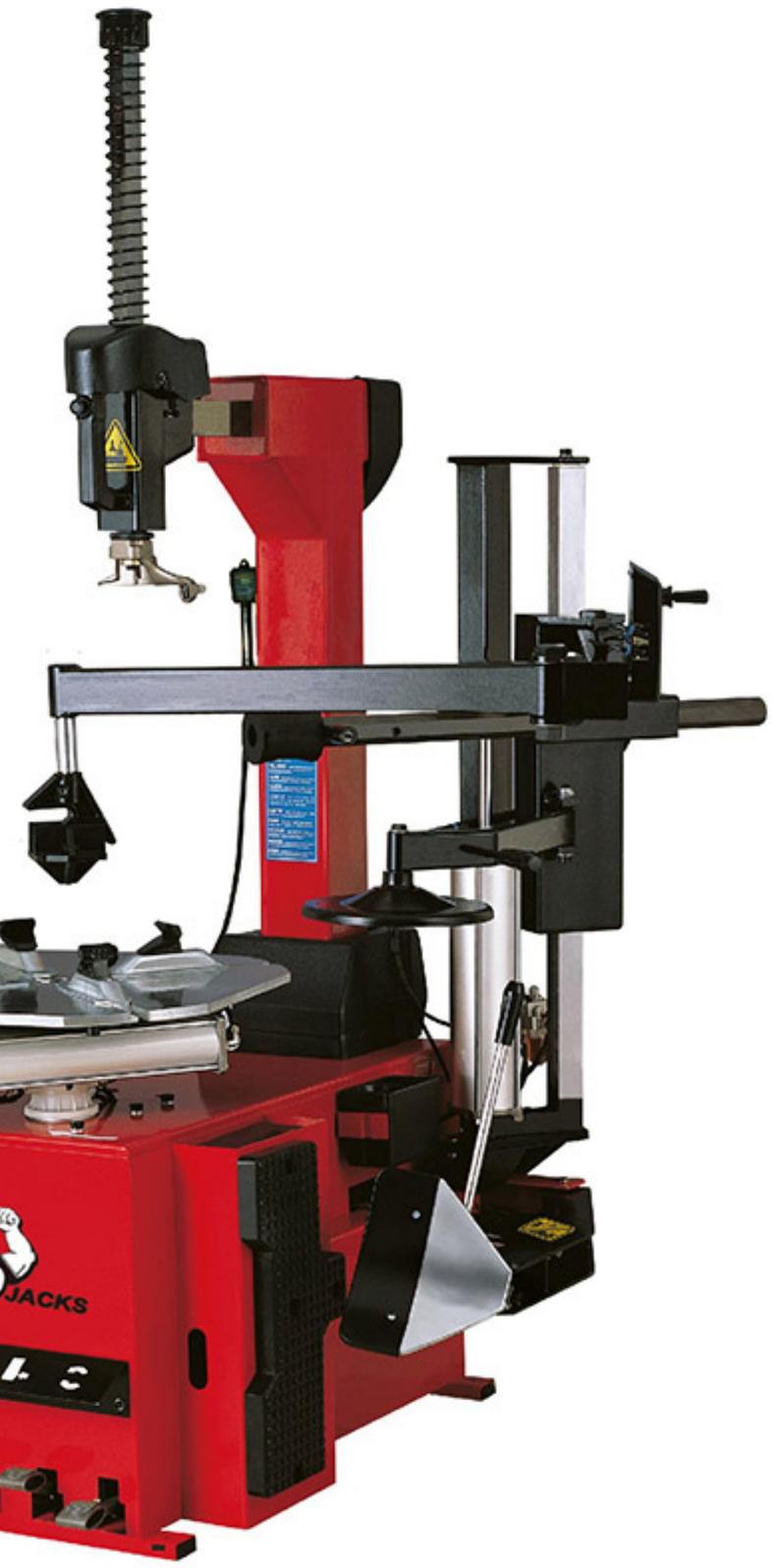

TRE-236

CE

Full automatic pneumatic tilting column Independent right helper arm, with pneumatic tire lifting device 360 rotary tire pressing helper arm. Four angle directional adjustable tire pressing shovel.

Technical Specification

Motor power	0.75 kw/0.55 kw/1.1 kw
Power supply	220 V/400 V/110 V
Max.wheel diameter	45"(1143 mm)
Max.wheel width	16"(406 mm)
Ouside clamping	12"~23"
Inside clamping	14"~26"
Air supply	8 bar
Bead breaker force	2500 kgs
N.W/G.W.	285/330 kgs
Package size(help arm)	1230x450x350 mm
Package size	1130x900x1030 mm
QTY/20'CY	20 PCS

TRE-237

CE

Full automatic pneumatic tilting column Independent tire helper arm, with pneumatic tire lifting device 360 rotary tire pressing helper arm Four angle directional adjustable tire pressing shovel

Technical Specification

Motor power	0.75 kw/0.55 kw/1.1 kw
Power supply	220 V/400 V/110 V
Max.wheel diameter	45"(1143 mm)
Max.wheel width	16"(406 mm)
Ouside clamping	12"~23"
Inside clamping	14"~26"
Air supply	8 bar
Bead breaker force	2500 kgs
N.W/G.W.	380/428 kgs
Package size(help arm)	1550x310x550 mm
Package size	1130x900x1030 mm
QTY/20'CY	20 PCS

Car Tire Changer

TRE-229A

Pneumatically operated tiltings column with double helper arm and tubeless tire inflating system

Technical Specification

Motor power	0.75 kw/0.55 kw/1.1 kw
Power supply	220 V/400 V/110 V
Max.wheel diameter	41"(1140 mm)
Max.wheel width	14"(355 mm)
Ouside clamping	10"~21"
Inside clamping	12"~24"
Air supply	8 bar
Bead breaker force	2500 kg
Noise level	< 75 db
N.W./G.W.	357/409 kgs
Package size(main body)	1# 960x760x1030 mm
Package size(help arm)	2# 1230x450x350 mm
Package size(help arm)	3# 1550x310x550 mm
QTY/20'CY	22 PCS

Technical Specification

Motor power:	0.75 kw/0.55 kw/1.1 kw
Power supply:	220 v/400 v/110 v
Max. wheel diameter:	41"(1040 mm)
Max. wheel width:	14"(355 mm)
Clamping:	6"~24"
Air supply:	8 bar
Bead breaker force:	2500 kgs
Noise level:	<75 dB
N.W./G.W.:	170/194 kgs
Package size:	960x760x930 mm
QTY/20'CY	36 PCS

TRE-206

Semi-automatic side swing arm
Special for motorcycle tire-changing

Motorcycle Wheel Balancer

TRE-108

Technical Specification

Max. wheel weight	65 kgs
Power supply	220 v/110 v
Balancing accuracy	±1 g
Balancing speed	80 r.p.m
Rim diameter	10"~24"
Rim width	1.5"~20"
Measuring time	8 sec.
Noise level	<70 dB
Package size	1# 760x560x1030 mm
	2# 730X350X160 mm
N.W./G.W.	1# 46/66 kgs
	2# 4.9/5.9 kgs
QTY/20'CY	60 PCS

Truck Tire Changer

TRE0568

Semi-automatic truck tire changer
Universal self-centering chuck
Clockwise and anticlockwise rotation of chuck
Rim capacity 14"-26"

Technical Specification

Rim diameter	14"-26"
Max.wheel weight	500 kgs
Max.wheel width	780 mm
Max.tyre diameter	1600 mm
Hydraulic pump motor	1.5 kw 380 V/220 V
Bead breaker force	2500 kgs
Operation control voltage	24 V
Power	220 V/400 V 50/60 Hz
N.W./G.W.	570/647 kgs
Package size	2030x1600x1000 mm
QTY/20'CY	8 PCS

TRE0598

SEMI-Automatic universal truck tire changer for industrial. Agricultural and earthmoving wheels Rim capacity 14"-22"

Technical Specification

Rim diameter	14"-42"
Max.wheel weight	1600 kgs
Max.wheel width	1050 mm (41")
Max. tire diameter	2300 mm(90")
Hydraulic pump motor	2.2kw 380 V/220 V
Bead breaker force	3300 kgs
Operation control voltage	24 V
Power	220 V/400 V 50/60 Hz
N.W./G.W.	758/850 kgs
Package size	2130x1850x1090 mm
QTY/20'CY	6 PCS

Truck tire changer has been specifically designed to mount and demount truck, bus, tractors and earthmoving vehicles tires Rim capacity 14"-56"
Bi-directional chuck with 2 rotational speeds

TRE0980

Technical Specification

Rim diameter	14"-56" with extensions
Max.wheel diameter	2500 mm
Max.wheel width	1200 mm
Max. tire weight	2000 kgs
hydraulic unit motor	4.0 KW
Power upply	380 V/400 V 50/60 Hz
N.W./G.W.	1145/1300 kgs
Package size	2310x2080x1100 mm
QTY/20'CY	4 PCS

Truck Tire Changer

Technical Specification

Rim diameter	19"~26"
Max.wheel weight	380 kgs
Max.wheel width	470 mm
Max.tyre diameter	1400 mm
Hydraulic pump motor	3.3kw 380V-3Ph
Bead breaker force	2500 kgs
Operation control voltage	24V
Overall dimensions approx	1300x1700 mm
N.W. / G.W.	485 kgs / 550 kgs
Package size	1220x1150x1720 mm
QTY/20'CY	8PCS

TRE0588T

CE

Technical Specification

Rim diameter	14"~48" / 14"~60"
Max.wheel weight	2000 kgs
Max.wheel width	1400 mm
Max.tyre diameter	2600 mm
Hydraulic pump motor	4.0kw
Gearbox motor	4.0kw
Operation control voltage	24V
Overall dimensions approx	2500x2000 mm
Power	400V 50/60Hz 3P
N.W. / G.W.	1433 kgs / 1737 kgs
Package size	2310x2100x1100 mm
QTY/20'CY	4 PCS

TRE0998

CE

Tire Balancer

Hand-operated distance and wheel diameter input

CE

TRE-500

Technical Specification

Motor power	0.2 KW/0.37 KW
Power supply	220 V/110 V
Balancing accuracy	±1 g
Balancing speed	200 r.p.m
Rim diameter	10"~24"
Rim width	1.5"~20"
N.W./G.W.	88/112 kgs
Package size	915x760x1230 mm
QTY/20'CY	18 PCS

TRE-800

Latest advanced technology
High-precision of self-adhesive weight position finding

Technical Specification

Max. wheel weight:	65 kg
Motor power	0.2 KW/0.37 KW
Power supply	220 V/110 V
Balancing accuracy	±1 g
Balancing speed	220 r.p.m
Rim diameter	10"~24"
Rim width	1.5"~20"
N.W./G.W.	98/122 kgs
Package size	960x760x1230 mm
QTY/20'CY	18 PCS

TRE-100

Latest advanced technology
High-precision of self-adhesive weight position finding

CE

Technical Specification

Motor power	0.2 KW/0.37 KW
Power supply	220 V/110 V
Balancing accuracy	±1 g
Balancing speed	200 r.p.m
Rim diameter	10"~24"
Rim width	1.5"~20"
N.W./G.W.	101/126 kgs
Package size	960x760x1230 mm
QTY/20'CY	18 PCS

Tire Balancer

TRE-820

Latest advanced technology
High-precision of self-adhesive weight position finding

CE

Technical Specification

Max. wheel weight:	65 kg
Motor power	0.2 KW/0.37 KW
Power supply	220 V/110 V
Balancing accuracy	±1 g
Balancing speed	220 r.p.m
Rim diameter	10"~24"
Rim width	1.5"~20"
N.W./G.W.	98/122 kgs
Package size	960x760x1230 mm
QTY/20'CY	18 PCS

TRE-579

Latest advanced technology
High-precision of self-adhesive weight position finding

CE

Technical Specification

Motor power	0.2 KW/0.37 KW
Power supply	220 V/110 V
Balancing accuracy	±1 g
Balancing speed	200 r.p.m
Rim diameter	10"~24"
Rim width	1.5"~20"
N.W./G.W.	103/126 kgs
Package size	960x760x1250 mm
QTY/20'CY	18 PCS

TRE-828

CE

Latest advanced technology
High-precision of self-adhesive weight position finding

Technical Specification

Motor power	0.2 KW/0.37 KW
Power supply	220 V/110 V
Balancing accuracy	±1 g
Balancing speed	220 r.p.m
Rim diameter	10"~24"
Rim width	1.5"~20"
N.W./G.W.	102/130 kgs
Package size	960x760x1160 mm
QTY/20'CY	18 PCS

Tire Balancer

For passenger car,light commercial vehicle wheels
Hand-operated distance and wheel diameter input
Various balancing modes
Self-calibration and diagnosis

CE

Hand operate

NEW PRODUCT

TRE-Z800

Technical Specification

Max. Wheel weight	40kgs
Motor Power	N/A
Power supply	N/A
Balancing accuracy	±1g
Balance speed	N/A
Rim Diameter	10"-24"
Rim width	1.5"-20"
N.W/G.W	55/70kgs
Package Size	650x550x1050mm
QTY/20'CY	72 PCS

CE

TRE-825AZ

For passenger car,motorcycle and light commercial vehicle wheels
Automatic distance and wheel diameter measuring
Various balancing modes
Self-calibration and diagnosis
Plastic safe-guard works as the START and STOP button while balancing the wheel by pulling the guard down/up.
Optional universal wheel flange,motorcycle adaptor and large centring cone

Technical Specification

Max. Wheel weight	65kgs
Motor Power	0.2KW
Power supply	220V
Balancing accuracy	±1g
Balance speed	220 r.p.m
Rim Diameter	10"-24"
Rim width	1.5"-20"
N.W/G.W	95/115kgs
Package Size	900x560x1150mm
QTY/20'CY	48 PCS

TRE-Z825B

For passenger car,motorcycle and light commercial vehicle wheels
Hand-operated distance and wheel diameter input
Various balancing modes
Self-calibration and diagnosis
Plastic safe-guard works as the START and STOP button while balancing the wheel by pulling the guard down/up.
Optional universal wheel flange,motorcycle adaptor and large centring cone

Technical Specification

Max. Wheel weight	65kgs
Motor Power	0.2KW
Power supply	220V
Balancing accuracy	±1g
Balance speed	220 r.p.m
Rim Diameter	10"-24"
Rim width	1.5"-20"
N.W/G.W	90/110kgs
Package Size	900x560x1150mm
QTY/20'CY	48 PCS

www.tongrukjacks.com

Tire Balancer

TRE-1200

Technical Specification

Max. wheel weight:	150 kg
Rim diameter	13"~24"
Rim width	5.5"~20"
Max. Wheel Diameter.	1200 mm
Testimg time	8 s
Air pressure	6-8 bar
Power supply	220 V/400 V
N.W./G.W.	250/320 kgs
Package size	1250x960x1100 mm
QTY/20'CY	20 PCS

.Movable & easy- your good helper.
.With self-calibration and self-diagnosis functions.
.LED light & Digital display.

CE

TRE-110

Technical Specification

Optional power supply	110v(1ph)/220v(1/3ph) 380v(3ph)
Balancing speed	±120 r.p.m
Balancing accuracy	± 1g(0.04 OZ)
Measuring time	8s
N/G weight	35/42 kg(77.2/92.6 lbs)

Four Wheel Alignment

TRE6002

Features:

1. It has the latest 3D alignment software which is easy to operate; 32"/≥17" LCD dual-screen display.
2. Mini-Printer is optional, which will save 4/5 consumables (international-leading).
3. The repeated measurement error is within the international standard ±0.04°.which rightly meet the need of luxury cars, more accuracy.
4. The handheld auxiliary monitor is optional.
5. Zero calibration software is optional; the sensors can be self-calibrated after the warranty period.
6. Super-low chassis vehicles can be detected.

Technical Specification

Item Range	Measurement Accuracy	Measurement Range	Total Measurement
Camber	±0.02°	±8°	±8°
Caster	±0.05°	±19°	±19°
Front wheel KPI	±0.02°	±19°	±19°
Total Toe	±0.02°	±2°	±8°
Rear wheel thrust angle	±0.02°	±2°	±84°
Toe-out on turn	±0.08°	±2°	±45°
Axle offset of Rear wheel	±0.02°	±2°	±4°
Wheel tread difference	±0.03°	±2°	±8°
Front setback	±0.02°	±2°	±4°
Rear setback	±0.02°	±2°	±4°
Wheel tread	±0.64 cm (±0.25 cm)	<265 cm (<105 in)	<265 cm (<105 in)
Wheelbase	±0.64 cm (±0.25 cm)	<533 cm (<210 in)	<533 cm (<210 in)

Package Size	N.W./G.W.	QTY/20'CY
1# 2250X470X500 mm	1# 70/85 kgs	10 Sets
2# 1200X470X440 mm	2# 25/28 kgs	
3# 2740X310X400 mm	3# 18/31 kgs	
4# 1250X810X900 mm	4# 105/120 kgs	

NEW PRODUCT

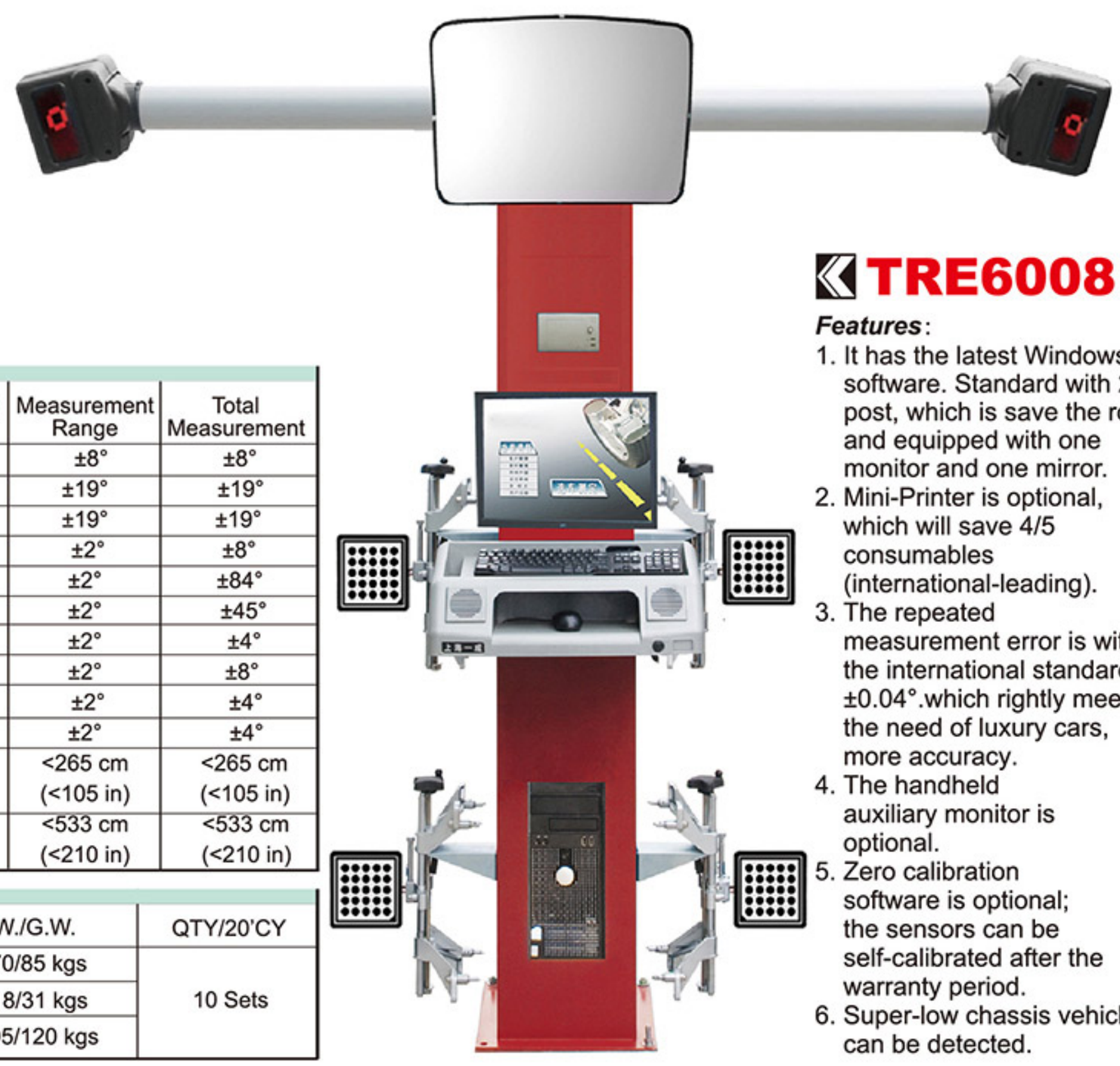

TRE6008

Features:

1. It has the latest Windows 10 software. Standard with 2M post, which is save the room and equipped with one monitor and one mirror.
2. Mini-Printer is optional, which will save 4/5 consumables (international-leading).
3. The repeated measurement error is within the international standard ±0.04°.which rightly meet the need of luxury cars, more accuracy.
4. The handheld auxiliary monitor is optional.
5. Zero calibration software is optional; the sensors can be self-calibrated after the warranty period.
6. Super-low chassis vehicles can be detected.

Technical Specification

Item Range	Measurement Accuracy	Measurement Range	Total Measurement
Camber	±0.02°	±8°	±8°
Caster	±0.05°	±19°	±19°
Front wheel KPI	±0.02°	±19°	±19°
Total Toe	±0.02°	±2°	±8°
Rear wheel thrust angle	±0.02°	±2°	±84°
Toe-out on turn	±0.08°	±2°	±45°
Axle offset of Rear wheel	±0.02°	±2°	±4°
Wheel tread difference	±0.03°	±2°	±8°
Front setback	±0.02°	±2°	±4°
Rear setback	±0.02°	±2°	±4°
Wheel tread	±0.64 cm (±0.25 cm)	<265 cm (<105 in)	<265 cm (<105 in)
Wheelbase	±0.64 cm (±0.25 cm)	<533 cm (<210 in)	<533 cm (<210 in)

Package Size	N.W./G.W.	QTY/20'CY
1# 2250X470X500 mm	1# 70/85 kgs	10 Sets
2# 2740X310X400 mm	2# 18/31 kgs	
3# 1250X810X900 mm	3# 105/120 kgs	

Temperature-control Timing Vulcanizing Machine

TRAD001

Characteristics and performance:
The machine is of automatic constant temperature. It is featured by power signal indication, short circuit protection, and optional fixed-time work or normally ON, etc.

It is mainly applicable to the repair of various tube tires , small-size cover tyres and vacuum tires.

TRAD001Q

PNEUMATIC

Technical Specification

Model	TRAD001	TRAD001Q
Input voltage	220 V or 110V	220 V or 110V
Input power	500 W	500 W
Temperature range	145-165 ℃	145-165 ℃
Repair area	60×60 mm²	60×60 mm²
Single G.W/N.W	8.3/7.9 kgs	8.95/7.9 kgs
Single package size	325x190x390 mm	330×195×510 mm
G.W/N.W.	34.35/33 kgs	37.5/35.8 kgs
QTY/CTN	4 PCS	4 PCS
Packgae size	675x405x410 mm	685x415x535 mm
QTY/20'CY	200 PCS	160 PCS

Vertical Seven-mold Constant-Temperature Vulcanizing Machine

Characteristics and performance
The machine is of automatic constant temperature,could realize double-size heating, and is equipped with separate switch for control. What's more, the body mold is equipped with bow-type bracket and transom, making the machine more practical and convenient.Equipped with seven-piece molds, the machine could completely meet the demand of repair any position of tires (such as tire shoulder, tire crown, and tire side), and users only need to select corresponding mould. It is featured by power signal indication, short circuit protection, and optional 120min timing or normally ON, etc.

It is mainly applicable to the repair of various tube tires, small- and medium-size cover tires and vacuum tires.

TRAD004

TRAD004Q

PNEUMATIC

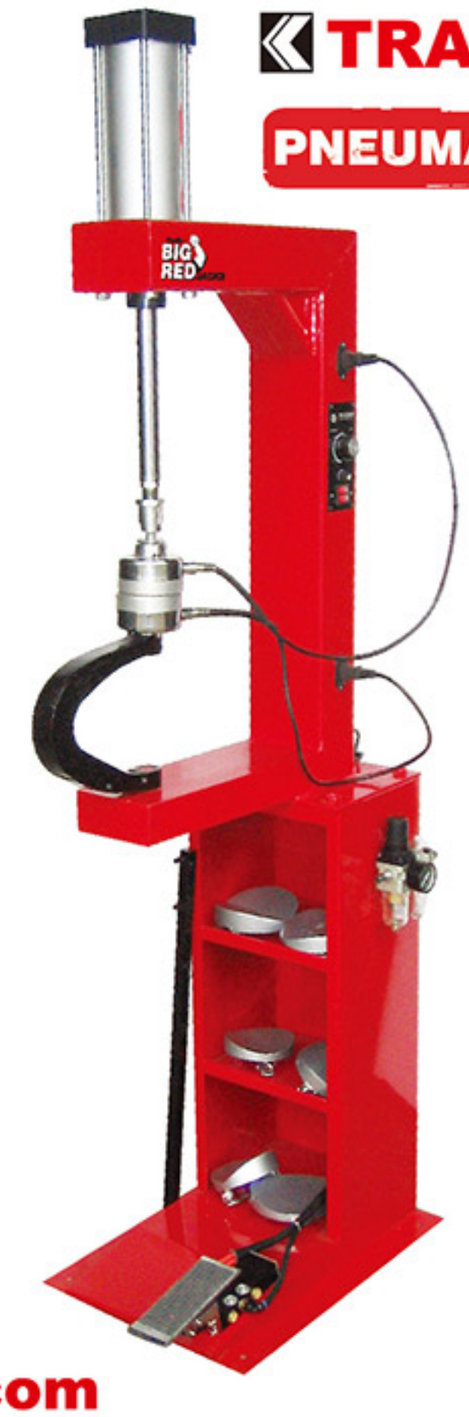

Technical Specification

Model	TRAD004	TRAD004Q
Input voltage	220 V or 110V	220 V or 110V
Input power	500 W×2	500 W×2
Temperature range	145-165 ℃	145-165 ℃
Repair area	100×80 mm²	100×80 mm²
G.W./N.W.	62/42 kgs	64/44 kgs
Package size	545x415x1475 mm	545x415x1805 mm
QTY/20'CY	50 PCS	50 PCS

Tire Vulcanizing Machine

Technical Specification

Model	TRAD009	TRAD009Q
Working voltage	220 V	220 V
Maximum power	≈2000 W	≈2000 W
Repair temperature	lower mold 160°C, upper mold 150±10°C, and side mold 150±10°C (the temperature of lower mold is adjustable)	
N.W. / G.W.	82 / 107 kgs	85.6/120 kgs
Packgae size	775x600x1300 mm	775x600x1810 mm
QTY/20'CY	170 PCS	170 PCS

Characteristics and performance

- Use together with up, down and side mold, to better repair all sides of tires.
- Top arm and side arm can turn 90°

Press Mold Tire

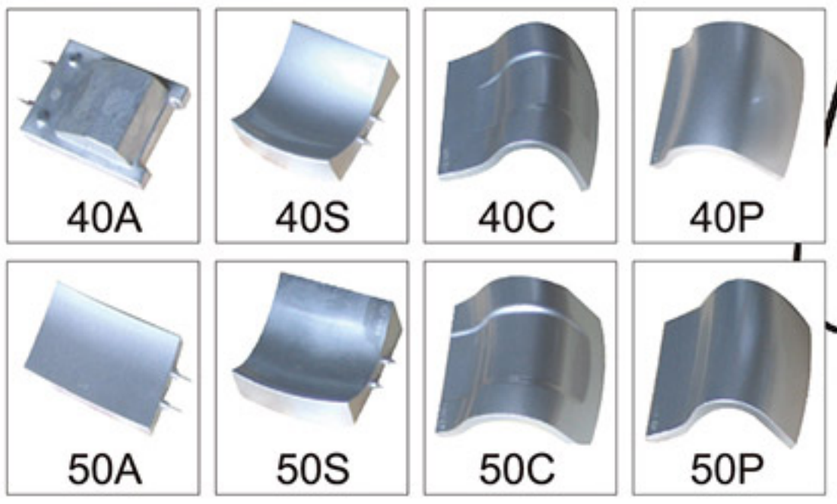

TRAD009

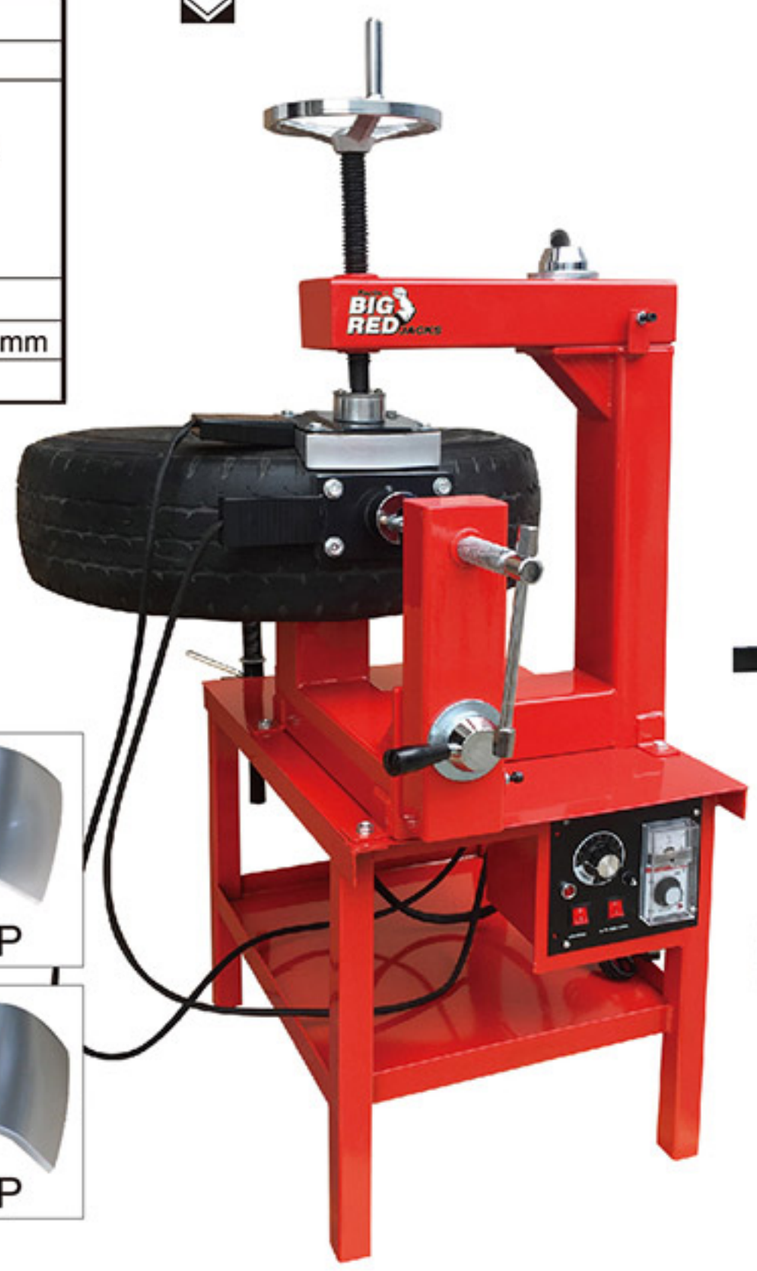

TRAD009Q

Truck Tire Vulcanizing Machine

Tire Shoulder Vulcanizing

Tire Tread Vulcanizing

Tire Side Vulcanizing

TRAD010

Press Mold Tire

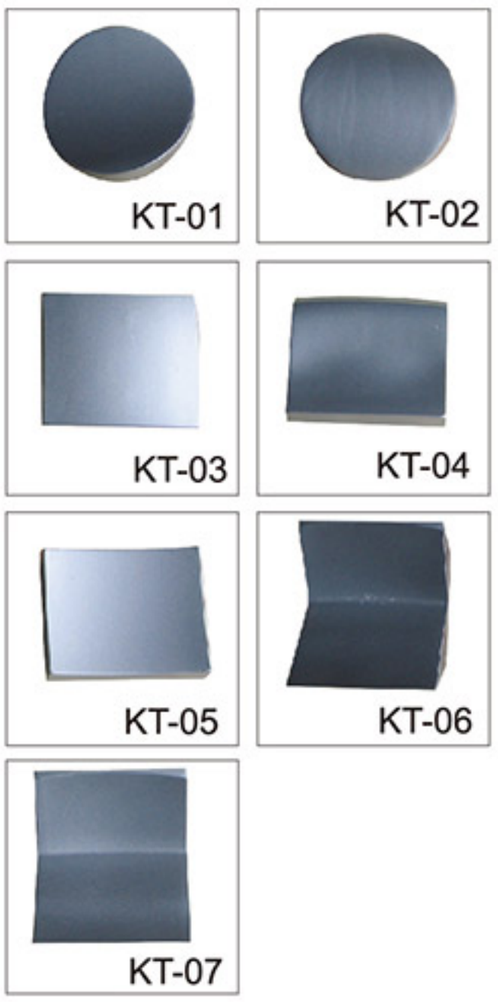

Technical Specification

Input voltage	AC 220V or 110V
Input power	2x500 W
Temperature range	145-165 °C
G.W. / N.W.	21.5 / 20 kgs
Packgae size	685x435x130 mm
QTY/20'CY	750 PCS

Tire Expander

Air lifting work platform for easy loading and working for the tire.
360 degree rotate work platform and LED light easy for using.
Fit for less than 1200R20 tire.

Technical Specification

Biggest enlargmen	350 mm
Input voltage	85-265V
Lifting height	660 mm
Working pressure	0.6-0.8Mpa
N.W. / G.W.	114.9 / 155.7 kgs
Package size	1300x850x880 mm
QTY/20'CY	16 PCS

TRAD006

PNEUMATIC

TRAD002

With dual foot-operated air valves adopted for control, the machine is equipped with 220V working light double cup air-source processor, which could set the air pressure to a safe value, and tool tray, which makes operation more convenient and practical. It is featured by five adjustable scopes of tyre expansion, safe pneumatic positioning, and that the cylinder is equipped with over-pressure protection device, etc.

Technical Specification

Biggest enlargmen	350 mm
Input voltage	85-265V
Lifting height	660 mm
Working pressure	0.6-0.8Mpa
N.W. / G.W.	56 / 58.5 kgs
Package size	580x550x940 mm
QTY/20'CY	80 PCS

TRAD003

The machine is featured by 180° rotation and within-60° skew adjustment of upper frame, six adjustable scopes of tire expansion, and safe positioning, etc. The tool tray provided together with the machine makes operation more convenient.

Technical Specification

Max. expansion distance	350 mm
G.W./N.W.	27/24 kgs
Package size	340x340x830 mm
QTY/20'CY	250 PCS

TRAD005

X style base for stability fir for most sedan

Technical Specification

Biggest enlargmen	250 mm
N.W. / G.W.	17 / 18 kgs
Package size	940x380x150 mm
QTY/20'CY	540 PCS

Combi Bead Breaker

TRND6100
10 Ton

TRND6220
10 Ton

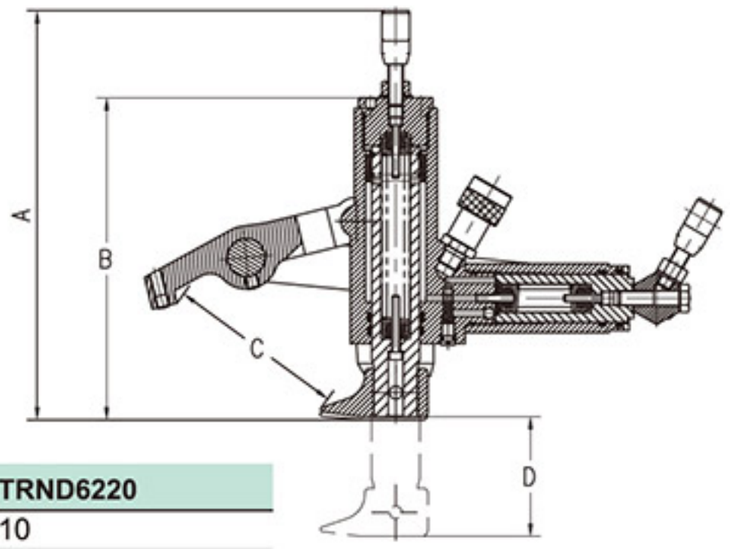

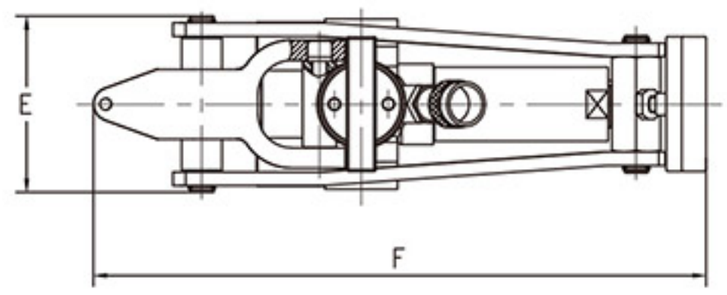

Model:	TRND6100	TRND6220
Capacity(Ton):	10	10
Pressure(Mpa):	70	70
QTY/Pack:	1	1
N.W./G.W.(kgs):	12.5/13.5	15.5/16.5
Package Size(mm):	390x390x160	390X390X160
QTY/20'CY:	1300	1300
MOQ:	50	50

Model	Capacity TON	Pressure Mpa	A	B	C	D	E	F
TRND6220	10	70	325	256	150	95	131	456
TRND6100	10	70	327	258	131.5	95	138	449

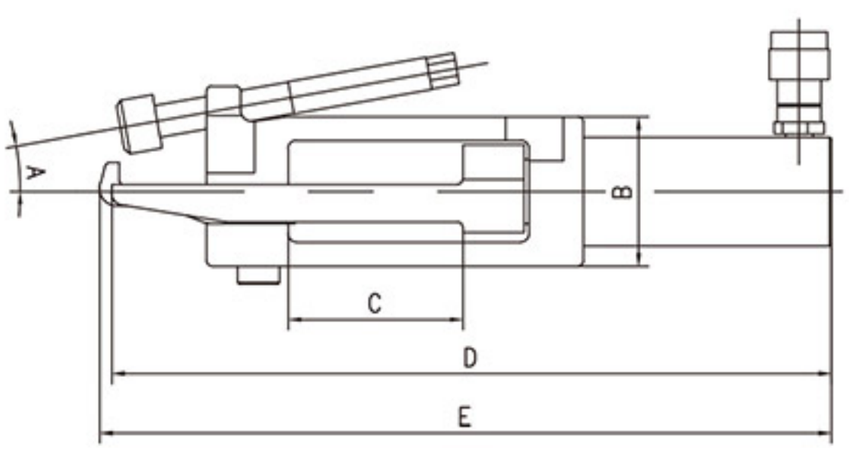

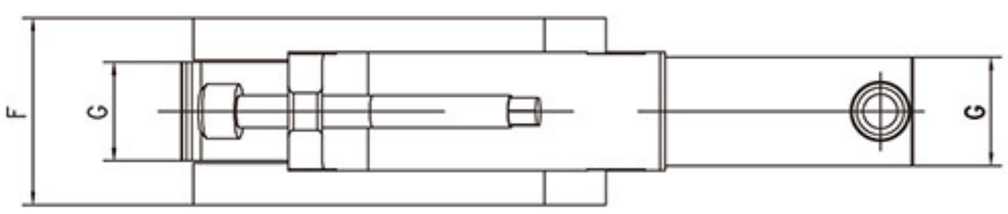

Option:
TRNAP002

Model:	TRNAP002
Usable Oil Volume (L):	1.6
Pressure (Mpa):	70
Air Source Pressure (Mpa):	0.7-1.0
Reservoir Materail:	Aluminum
Out Put Oil Thread (in):	3/8-18 NPT
N.W/G.W (kgs):	7.5/8
Package Size (mm):	305x175x210
MOQ :	50

Model:	TRND6200
Capacity(Ton):	13
Pressure(Mpa):	70
QTY/Pack:	1
N.W./G.W.(kgs):	15/16
Package Size(mm):	390X390x160
QTY/20'CY:	1300
MOQ:	50

Model	Capacity TON	Pressure Mpa	A	B	C	D	E	F	G	H
TRND6200	13	70	10°	88	102	423	433	110	58	Φ64

TRND6200
13 Ton

Tire Bead Blaster

Model:	TRAD018	TRAD018K	TRAD036	TRAD036K		TRAD07A
Work Pressure:	0.6-0.8 Mpa	0.6-0.8 Mpa	0.6-0.8 Mpa	0.6-0.8 Mpa		0.6-0.8 Mpa
Max.Work Pressure:	1.0 Mpa	1.0 Mpa	1.0 Mpa	1.0 Mpa		1.0 Mpa
Capacity:	5 Gallon	5 Gallon	10 Gallon	10 Gallon		1.8 Gallon
N.W.:	11kgs	10.7 kgs	15 kgs	15 kgs	3.5 kgs /1 pcs	16.8 Kgs / 4 pcs
G.W.:	12 kgs	11.7kgs	17 kgs	17 kgs	4.2 kgs /1 pcs	18 Kgs / 4 pcs
Package Size:	435x410x300 mm	490x420x300 mm	575x430x340 mm	575x485x340 mm	600x190x240 mm / 1 PC	615x405x525 mm / 4 PCS
QTY/20'CY:	450 PCS	415 PCS	280 PCS	280 PCS	972 PCS	720 PCS

Air Tank

Model:	TRG80501
Capacity:	5 Gallon
N.W.:	7 kgs
G.W.:	7.7 kgs
Package Size:	425x260x340 mm
QTY/20'CY:	660 PCS

NEW PRODUCT

Model:	TRG80701	TRG81001
Capacity:	7 Gallon	10 Gallon
N.W.:	8.5 kgs	10.2 kgs
G.W.:	9.2 kgs	11 kgs
Package Size:	435x325x395 mm	535x325x375 mm
QTY/20'CY:	520 PCS	432 PCS

TRG80501
5 Gallon

TRG80701
7 Gallon

TRG81001
10 Gallon

Tire Regroover

Technical Specification

Input voltage	110V or 220V
Input power	350 W
N.W. / G.W.	6.7 / 7.2 kgs (1 PC)
	28.8 / 29.8 kgs (4 PCS)
Packgae size	320x220x240 mm (1 PC)
	655x455x265 mm (4 PCS)
QTY/20'CY	1376 PCS

TRDH001

Blade style:

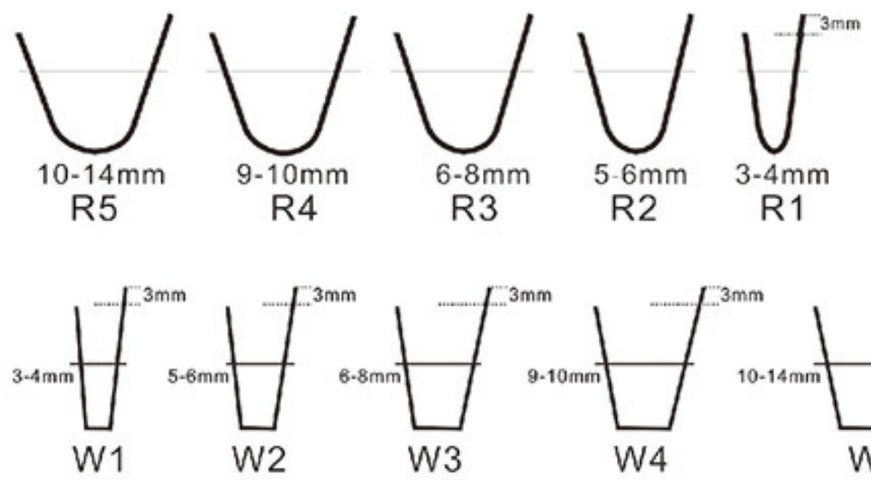

Hydraulic Ram Straightening Machine with Lathe

This unique machine is used to correct and straighten all kinds of defected steel and alloy rims ranging from 10" to 26".

TRE595M

Technical Specification

Motor Specifictions	Mechanic 0,55 kw, 1400 rpm, 0,75 hp,
	220V - 380 V
	Hydraulic 0,75 kw 1400 rpm, 1 hp,
	220V - 380 V
	Noise level 35 db
Hydraulic Piston Power	Total pressure = πr2 x 160 (Working pressure bar)
	Total pressure = 3,14x (3,15 x 3,15) = 31,156 kgs
	Total pressure = 31,156 x 160 = 4 984,96 kgs
Dimensions	Height 1250 mm ,Width 1110 mm ,Length 610 mm
Package Size	1370x880x1495 mm
N.W./G.W.	370/400 kgs
QTY/20'CY	11 PCS

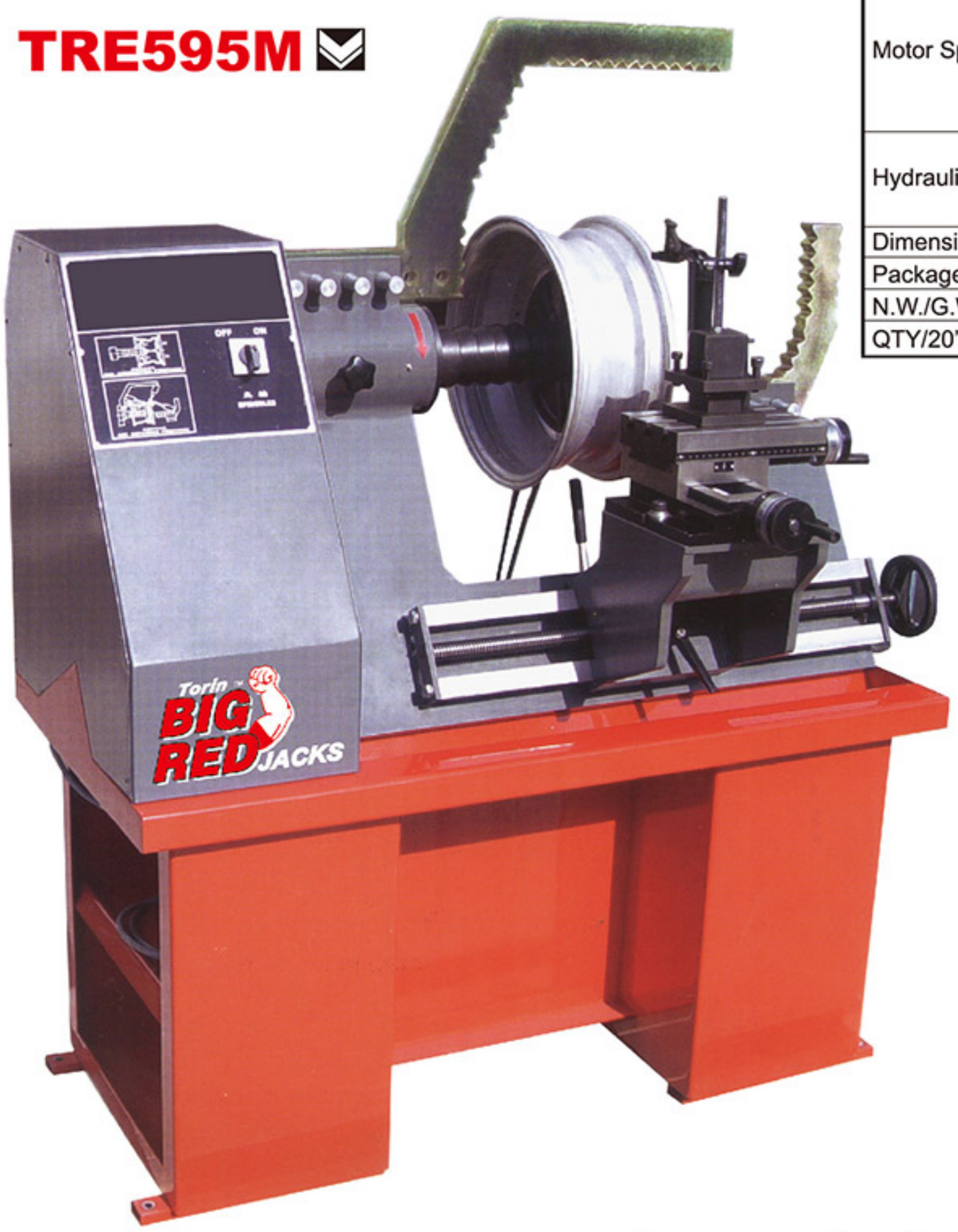

Brake Lathe

TRE9350

Quickly, accurately and efficiently to cutting rotor fast and slow setting allow cutting rotor;
Quickly, accurately and efficiently to cutting drum,Finitely adjustably setting allow cutting drum ;
Three kinds of speed to choice for spindle speed ;
A convenient design allows to quickly change from rotor to drum;
Position of stop make the lathe stop automatic after the cutting ;
Fully equipped adapter package

Technical Specification

Spindle Travel	6-7/8" / 175 mm
Spindle Speed	70, 80, 118 RPM
Spindle Feed Speed	Min 0.002 Inch Per Revolution / 0.05 Mm/Rev
	Max 0.02 Inch Per Revolution / 0.5 Mn/Rev
Cross Feed Speed	Min 0.002 Inch Per Revolution / 0.05 Mn/Rev
	Max 0.01 Inch Per Revolution / 0.025 Mn/Rev
Handwheel Graduations	0.002" / 0.05 mm
Motor Diameter	7" / 180 mm - 15" / 381 mm
Motor Thickness	1-7/8" / 48 mm
Drum Diameter	6" / 152 mm - 28: / 711 mm
Drum Depth	6-7/8" / 175 mm
Motor	1 PH 220V 50/60Hz 3 PH 380V 50/60Hz
G.W./N.W.	290/240 kgs
Package Size	970X950X1140 mm
QTY/20'CY	20 PCS

TRE9372

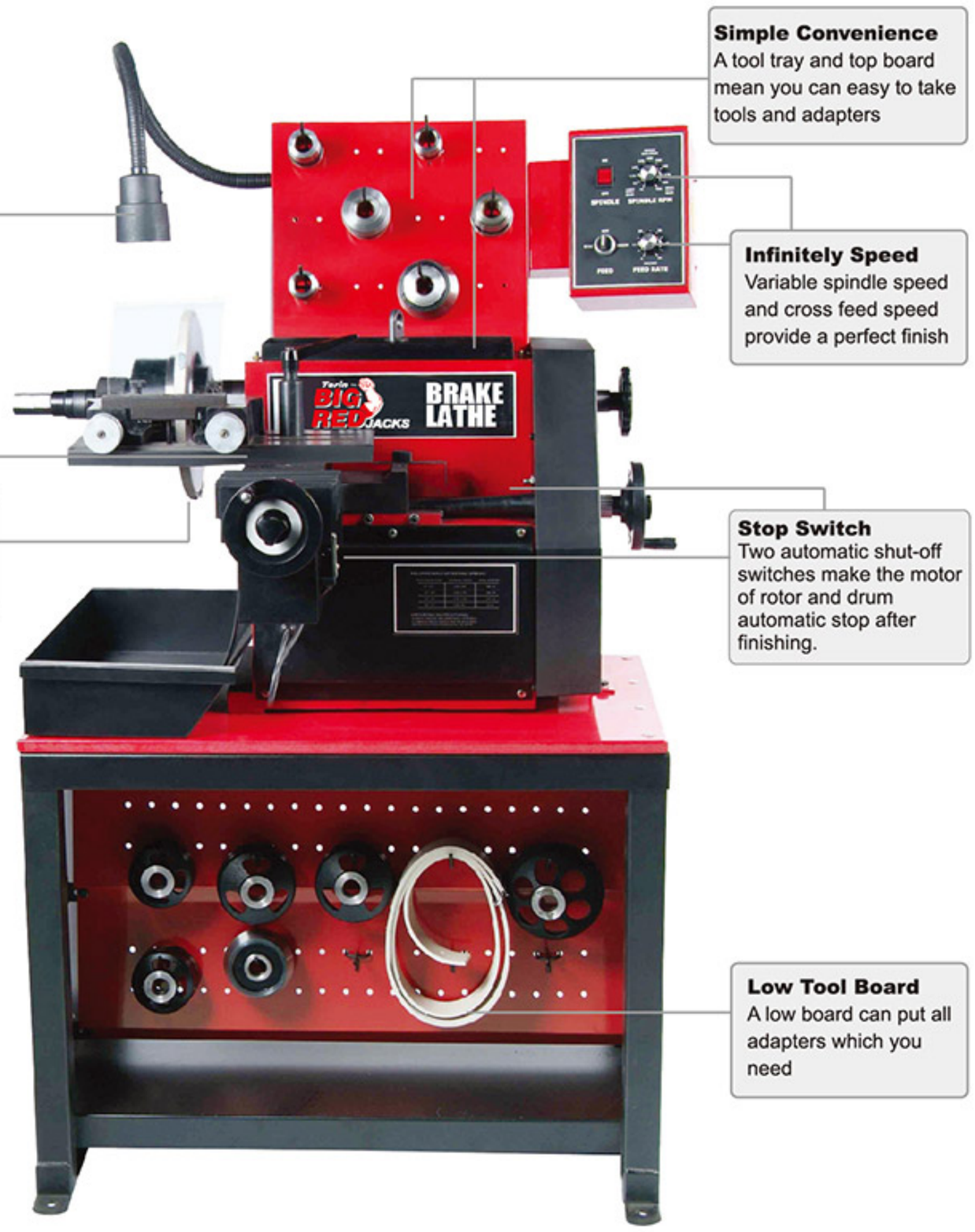

Technical Specification

Motor Diameter	4" / 102 mm - 24" / 610 mm
Motor Thickness	2.85" / 73 mm
Drum Diameter	6" / 152 mm-28" / 711 mm
Drum Depth	9" / 229 mm
Flywheel Diameter	6" / 152 mm - 24" / 611 mm
Spindle Weight Capacity (Standard 1" Arbor)	150 lbs / 68 kgs
Spindle Speed	70-320 RPM
Feed Rates - Rotor and Drum	0" / 0 mm-0.026" / 0.66 mm
Feed Rate Per Minute	2.54" / 64.5 mm
Electrical Requirement	110 V/220 V/380 V 50/60 Hz
N.W./G.W.	250/300 kgs
Package Size	700x1140x750 mm
QTY/20'CY	48 PCS

Lifting Table Cart

Handle Heavy Loads!

Lift and lower heavy cargo for smooth,easy loading and unloading!Ideal for for transporting machinery and big tool chests,unloading trucks and more.Foot-pedal operates hydraulic tabletop.Handle-mounted pressure release.Truck ship.

150 KGS
TP01501
CE

300 KGS
TP03001
CE

300 KGS
TP04001
CE

500 KGS
TP05001
CE

500 KGS
TP05002

1000 KGS
TP10002
CE

NEW PRODUCT

HEAVY DUTY

Model	Capacity(kgs)	Lifting Range(mm)	Platform Size(mm)	Package Size(mm)	N.W.(kgs)	G.W.(kgs)	QTY/20' CY(PCS)
TP01501	150	220-720	700x450	835x500x250	43	45	234
TP03001	300	270-760	810x500	945x550x295	58	61	168
TP04001	300	360-1290	712x500	1050x560x400	104	121.5	100
TP05001	500	280-860	815x500	965x565x305	76	79	154
TP05002	500	360-1500	910x510	450x610x530	120	125	48
TP10002	1000	500-1700	1200x610	450x610x530	190	195	48

Car Dolly

sold in pairs

TRF0322
450 Kgs

→ Steel 3.5”

Model:	TRF0322
Capacity:	450 kgs
N.W.	18 kgs (Pair)
G.W.:	18.5 kgs (Pair)
Overall Size:	602x385x140 mm
Package Size:	635x420x115 mm
QTY/20’CY:	810 Pairs

sold in pairs

TC322
450 Kgs

→ PP 3.5”

Model:	TC322
Capacity:	450 kgs
N.W.:	14.5 kgs(pair)
G.W.:	15.2 kgs(pair)
Overall Size:	587x383x138.5 mm
Package Size:	mm650x436x120 mm
QTY/20’CY:	810 Pairs

sold in pairs

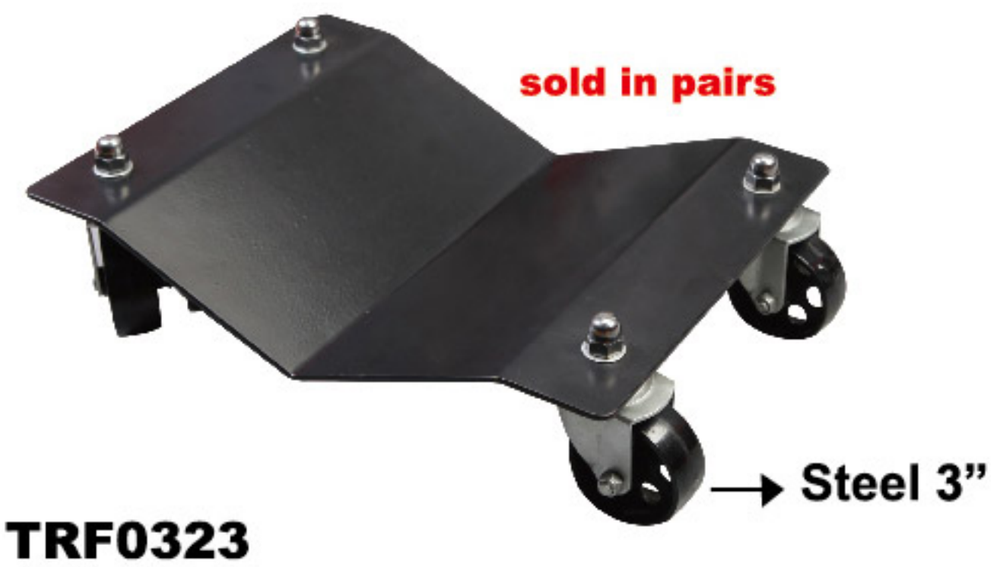

→ Steel 3”

TRF0323
450 Kgs

Model:	TRF0323
Capacity:	450 kgs
N.W.	15.6 kgs (Pair)
G.W.:	16.5 kgs (Pair)
Overall Size:	410x300x100 mm
Package Size:	420x320x128 mm
QTY/20’CY:	1500 Pairs

NEW PRODUCT

sold in pairs

TC323
450 Kgs

PP 3” ←

Model:	TC323
Capacity:	450 kgs
N.W.:	12.8 kgs(pair)
G.W.:	13.2 kgs(pair)
Overall Size:	412x300x115 mm
Package Size:	460x360x95 mm
QTY/20’CY:	1423 Pairs

Snowmobile Dolly

TRF0320
680 Kgs

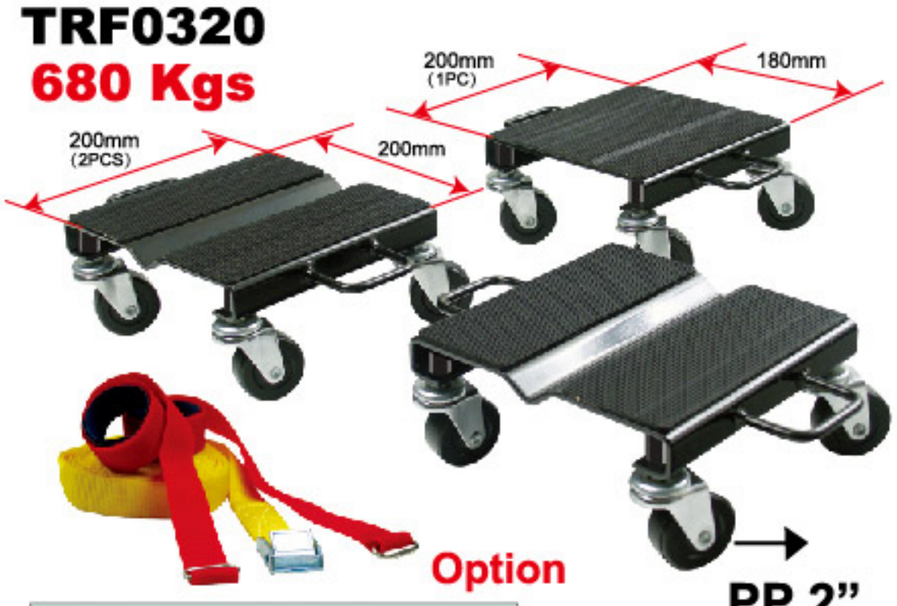

→ PP 2”

Model:	TRF0320
Capacity:	680 kgs
N.W.:	7 kgs
G.W.:	7.6 kgs
Package Size:	330x229x110 mm
QTY/20’CY:	2100 PCS

SNOWMOBILE DOLLY

NEW PRODUCT

TRF0320NS
680 Kgs

→ PP 3”

Model:	TRF0320NS
Capacity:	680 kgs
N.W.:	9.8 kgs
G.W.:	10.59 kgs
Package Size:	330x240x185 mm
QTY/20’CY:	1500 Pairs

Hydraulic Self-loading Dolly

TX9009 9”
TX9012 12”

TX9012L 12”

Model:	TX9009	TX9012	TX9012L
Capacity:	680 kgs	680 kgs	680 kgs
N.W.	17 kgs	18 kgs	18.5 kgs
G.W.:	18 kgs	20 kgs	20.5 kgs
Package Size:	570x570x180mm	635x570x180mm	635x570x180mm
QTY/20'CY:	480PCS	430PCS	430PCS

TRA12093 9”
TRA12094 12”

Model:	TRA 12093	TRA12094
Capacity:	570 kgs	570 kgs
N.W.	13.5	14.0
G.W.:	15.5	16.0
Package Size:	620x600x220 mm	680x620x220 mm
QTY/20'CY:	330 PCS	290 PCS

Dolly Rack

TX9009J

Model:	TX9009J
Net Weight:	10 Kgs
Gross Weight:	11 Kgs
Product Size:	760x470x230 mm
Package Size:	830x150x100 mm
Qty/20'cy:	1500 PCS

TX9009J

Mechanic Tyre Dolly

Model:	TX00603
capacity:	60 Kgs
Working Range:	238-443 mm
Net Weight:	5.7 Kgs
Gross Weight:	6.5 Kgs
Product Size:	619x484x183 mm
Package Size:	620x150x120 mm
Qty/20'cy:	2000 PCS

TX00603

Hydraulic Pallet Jack

Characteristic:

- High quality integrated cast cylinder
- Oil cylinder is equipped with permanent flow valve to ensure steady descend for the goods because of over loading.
- High-balanced intensifying frame
- Economical,superior cost performance
- High strength "C" type fork
- High strenght welding hydraulic,preeure oil cylinder,equipped with safety valve

CE

TRE8220A

2000 / 2500/3000 Kgs

CE

TRE8220C

4000 / 5000 kgs

CE

TRE8220B

2000 / 2500 / 3000 kgs

Model	TRE8220A		TRE8220B		TRE8220C	
Capacity	2000 / 2500 / 3000 kgs		2000 / 2500 / 3000 kgs		4000 / 5000 kgs	
Fork Width	550 mm	685 mm	550 mm	685 mm	550 mm	685 mm
Fork Length	1100 mm	1220 mm	1100/1150 mm	1220 mm	1100 mm	1220 mm
Max.Fork Height	195 / 185 mm		195 / 185 mm		185 / 175 mm	
Min.Fork Height	85 / 75 mm		85 / 75 mm		85 / 75 mm	
Max.lifting Height	≥110 mm		≥110 mm		≥110 mm	
Material of the Front Whell / Loaded Wheel	Nylon / Rubber / Polyurethane		Nylon / Rubber / Polyurethane		Nylon / Rubber / Polyurethane	
N.W. / PC	75 kgs	80 kgs	75 kgs	85 kgs	155 kgs	175 kgs
G.W. / PC	85 kgs	90 kgs	85 kgs	90 kgs	160 kgs	180 kgs
Package Size	2200x560x760 mm	2300x700x700 mm	2200x560x760 mm	2300x700x700 mm	2000x600x700 mm	2200x700x700 mm
QTY / Package	6 PCS	6 PCS	6 PCS	6 PCS	4 PCS	4 PCS
QTY / 20'CY	180 PCS	144 PCS	180 PCS	144 PCS	120 PCS	96 PCS

Hand Pallet Stacker

CE

TRE8310

1000 kgs

Adjustable Fork

TRE8310G

1000 kgs

Model	Capacity (kgs)	Lifting Height (mm)	Lowered Fork Height (mm)	Fork Length (mm)	Fork Width (mm)	Front Wheel (mm)	Loaded Wheel (mm)	Base Leg Width (mm)	Base Leg Inner Width(mm)	Overall Size (mm)	N.W/G.W (kgs)	Package Size (mm)	QTY/20'CY (PCS)
TRE8310	1000	1600	85	1150	330-740	Φ80x58	Φ180x50	690	490	1600x760x2030	210/226	1600x760x2030	29
TRE8310G	1000	1600	85	1150	550	Φ80x58	Φ180x50	490	290	1600x760x2030	224/226	1600x760x2030	29

Hand Pallet Stacker

TRE8310E
1000 kgs

TRE8315
1500 kgs

Adjustable Fork

TRE8315G
1500 kgs

TRE8320
2000 kgs

Adjustable Fork

Model	Capacity (kgs)	Lifting Height (mm)	Lowered Fork Height (mm)	Fork Length (mm)	Fork Width (mm)	Front Wheel (mm)	Loaded Wheel (mm)	Base Leg Width (mm)	Base Leg Inner Width(mm)	Overall Size (mm)	N.W/G.W (kgs)	Package Size (mm)	QTY/20'CY (PCS)
TRE8315	1500	1600	85	1150	330-740	Φ80x58	Φ 180x50	690	490	1600x760x2030	240/242	1600x760x2030	29
TRE8315G	1500	1600	85	1150	550	Φ80x58	Φ 180x50	490	290	1600x760x2030	240/242	1600x760x2030	29
TRE8320	2000	1600	85	1150	330-740	Φ80x58	Φ 180x50	690	490	1600x760x2030	270/272	1600x760x2030	29
TRE8310E	1000	3000	85	1150	550	Φ80x58	Φ 180x50	490	290	1600x760x2080	330/332	1600x760x2080	29

Semi-Electric Stacker

Performance characteristics:

Beautiful outline, streamline contour make it extraordinary and outstanding.
High quality steel ensures that pallet truck has stable andremarkable strength.
Mechanical brake mechanism can safely stop pallet truck under any circumstances.
High-power motor will shortened hoisting time ,and improve the working efficiency ,
when overload the stacker will automatically slow and steady placed the pallet.
Steering wheel protection and safety hood make your
operation to be more trustworthy.
Higher strength structural design

Single frame series

1000 kgs
TRSPN1016
1000 kgs
TRSPN1016G

1500 kgs
TRSPN1516
1500 kgs
TRSPN1516G

2000 kgs
TRSPN2016
2000 kgs
TRSPN2016G

Model	Description	Rated Capacity (kgs)	Max Fork Height (mm)	Fork Size (mm)	Fork Width (mm)	Outer Width of Front	Battery (v/kw)	Charger (v/A)	Overall Length (mm)	Overall Width (mm)	Overall Height (mm)	Overall Net Weight (Kg)
TRSPN1016	1Ton 1.6M Stacker (American Style)	1000	1600	1150x160	365-670	620	12/1.5-1.6	12/15	1875	810	2030	370
TRSPN1016G	1Ton 1.6M Stacker(Europe Style)	1000	1600	1150x160	550	490	12/1.5-1.6	12/15	1875	810	2030	370
TRSPN1516	1.5Ton 1.6M Stacker (American Style)	1500	1600	1150x160	365-670	620	12/1.5-1.6	12/15	1875	810	2030	385
TRSPN1516G	1.5Ton 1.6M Stacker(Europe Style)	1500	1600	1150x160	550	490	12/1.5-1.6	12/15	1875	810	2030	385
TRSPN2016	2Ton 1.6M Stacker (American Style)	2000	1600	1150x160	365-670	620	12/1.5-1.6	12/15	1875	810	2030	410
TRSPN2016G	2Ton 1.6M Stacker(Europe Style)	2000	1600	1150x160	550	490	12/1.5-1.6	12/15	1875	810	2030	410

Semi-Electric Stacker

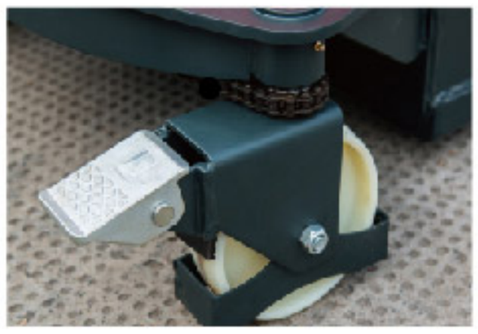

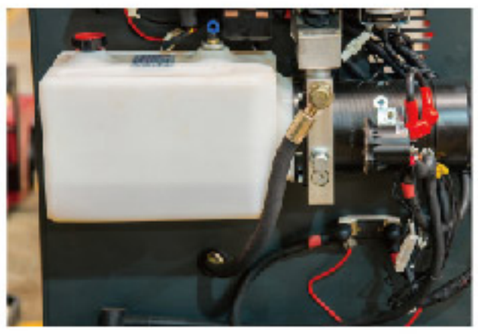

Double-frame series

1000 kgs
TRSPN1030
1000 kgs
TRSPN1030G

1500 kgs
TRSPN1530
1500 kgs
TRSPN1530G

2000 kgs
TRSPN2020
2000 kgs
TRSPN2020G

Model	Description	Rated Capacity (kgs)	Max Fork Height (mm)	Fork Size (mm)	Fork Width (mm)	Outer Width of Front Leg	Overall Length (mm)	Overall Width (mm)	Overall Height (mm)	Overall Net Weight (Kg)
TRSPN1030	1Ton 3M Stacker (American Style)	1000	3000	1150x160	365-670	620	1875	810	2070	490
TRSPN1030G	1Ton 3M Stacker(Europe Style)	1000	3000	1150x160	550	490	1875	810	2070	490
TRSPN1530	1.5Ton 3M Stacker (American Style)	1500	3000	1150x160	365-670	620	1875	810	2070	490
TRSPN1530G	1.5Ton 3M Stacker(Europe Style)	1500	3000	1150x160	550	490	1875	810	2070	490
TRSPN2020	2Ton 2M Stacker (American Style)	2000	2000	1150x160	365-670	620	1875	810	1570	490
TRSPN2020G	2Ton 2M Stacker(Europe Style)	2000	2000	1150x160	550	490	1875	810	1570	490

Tire Dolly

TRX4209
300 Kgs

Model:	TRX4209
Capacity:	300 Kgs
N.W.:	18 kgs
G.W.:	18.5 kgs
Package Size:	1540x620x440 mm
QTY/20'CY	200 PCS

TRX01506
100 Kgs

Model:	TRX01506
Capacity:	100 kgs
Package Size:	730x660x90 mm
N.W.:	5.5 kgs
G.W:	6 kgs
QTY/20' CY:	620 PCS

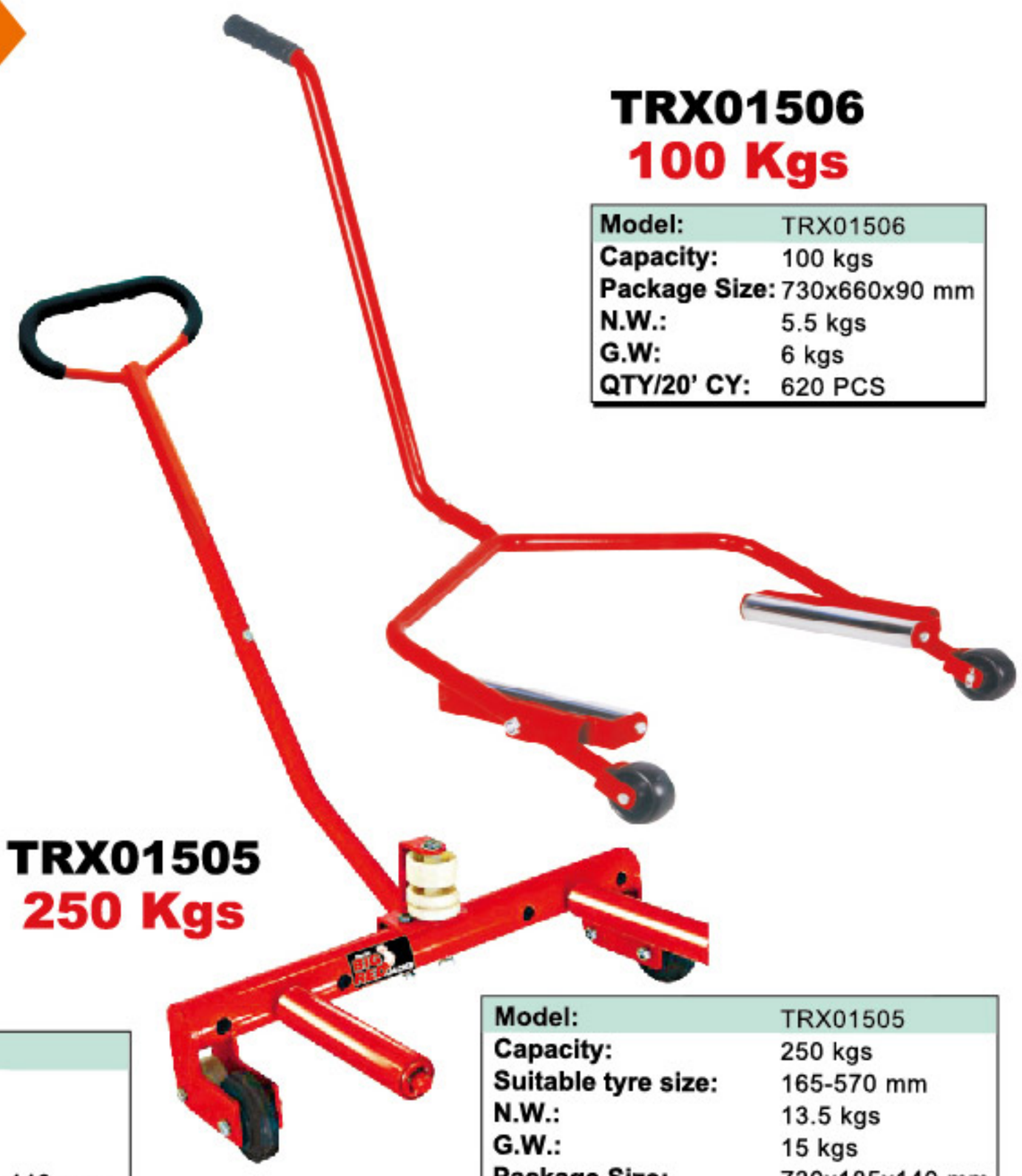

TRX01505
250 Kgs

Model:	TRX01505
Capacity:	250 kgs
Suitable tyre size:	165-570 mm
N.W.:	13.5 kgs
G.W.:	15 kgs
Package Size:	730x185x140 mm
QTY/20' CY:	980 PCS

Portable Tire Changer

Model:	TRK60001
N.W.:	27 kgs
G.W.:	39 kgs
Package Size:	740x555x360 mm
QTY/20' CY:	170 PCS

TRK60001

Size Adjustable

Tire Changer

Model:	TRK26101
N.W.:	13.5 kgs
G.W.:	15.5 kgs
Package Size:	890x305x310 mm
QTY/20' CY:	300 PCS

TRK26101

Dual Wheel Dolly

Patent No.:
ZL200910231901

CE

TX12002S
1.5 Ton

TX15002S
1.5 Ton

Assembly type

Model:	TX15002S
Capacity:	1.5Ton
Lifting Range:	0-750mm
Product Size:	1270X990X1340mm
N.W.:	106 Kgs
G.W.:	121 Kgs
Package Size:	1398x448x368 mm
QTY/20' CY:	120 PCS

Assembly type

Model:	TX12002S
Capacity:	1.5Ton
Lifting Range:	0-750mm
Product Size:	1270x990x1340mm
N.W.:	120kgs
G.W.:	148kgs
Package Size:	1400x450x370mm
QTY/20' CY:	112PCS

Model:	TX12006
Capacity:	1.5Ton
Lifting Range:	0-750mm
Product Size:	1270x1100x1340mm
N.W.:	133kgs
G.W.:	161kgs
Package Size:	1310x1130x340mm
QTY/20' CY:	48PCS

CE

TX12006
1.5 Ton

Hydraulic Drum Transporter

Model:	TRGA2502
Capacity:	250 kgs
Lifting Height:	280 mm
Max.Diameter:	600 mm
Max.Length:	915 mm
Overall Length:	800 mm
Overall Width:	760 mm
Overall dimension:	820x780x1250 mm
N.W.:	40 kgs
G.W.:	45 kgs
QTY/Package:	2 PCS/CTN
Package Size:	900x900x350 mm
QTY/20' CY:	72 PCS

Drum Transporter

Model:	TRTC0107
Capacity:	300 Kgs
N.W.:	15 kgs
G.W.:	17 kgs
Package Size:	840x590x220 mm
QTY/20'CY:	250 PCS

Model:	TRX10001
Capacity:	1 Ton
N.W.:	68 kgs
G.W.:	75 kgs
Product Size:	1040x1090x890 mm
Package Size:	1160x900x160 mm
QTY/20' CY:	150 PCS

Forklift Jack

Model:	TC50001
Lifting Capacity:	Scissors end 4 Ton Scissors post 5 Ton
Min. Height:	Scissors end 70 mm Scissors post 420 mm
Max.Height:	Scissors end 440mm Scissors post 740 mm
N.W.	45 kgs
G.W.:	46.5 kgs
Package Size:	745x263x340 mm
QTY/20'CY:	361 PCS

Spring Compressor

TRK1500-2
1 Ton

Model:	TRK1500-2
Capacity:	1 Ton
Compression Length:	210-570 mm
Ram Travel:	325 mm
Spring Size:	101.6-254 mm
Compressed Spring Diameter:	400 mm
N.W.:	31 kgs
G.W.:	36 kgs
Packagr Size:	1230x290x190 mm
QTY/20'CY:	300 PCS

TRK1500-3
1 Ton

Model:	TRK1500-3
Capacity:	1 Ton
Compressed Spring Diameter:	200 mm
Compression Length:	200-500 mm
N.W.:	28.5 kgs
G.W.:	32.5 kgs
Package Size:	830x350x190 mm
QTY/20'CY:	300 PCS

TRK1500-5
1 Ton

PNEUMATIC

Model:	TRK1500-5
Capacity:	1 Ton
Max Working Length:	480 mm
Spring Size:	210-570 mm
N.W.:	34 kgs
G.W.:	38 kgs
Package Size:	1200x290x220 mm
QTY/20'CY:	450 PCS

TRK1500-6
1 Ton

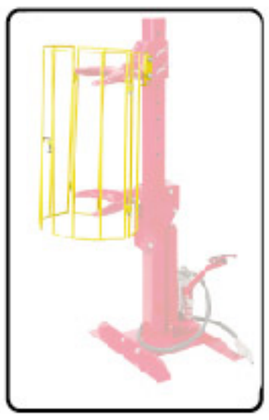

OPTION

TRK1500-6Q
1 Ton

PNEUMATIC

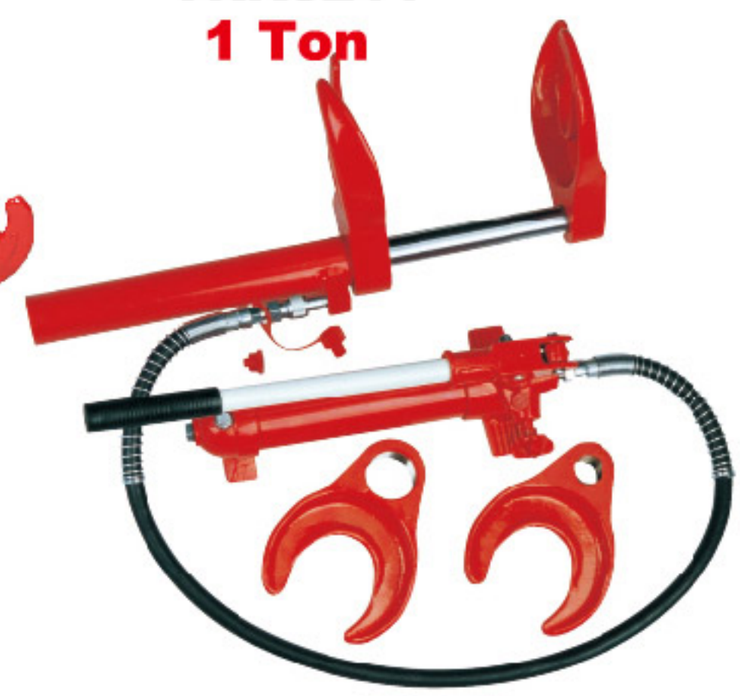

TRK3211
1 Ton

Model:	TRK1500-6	TRK1500-6C (with cover)	TRK1500-6Q	TRK1500-6QC (with cover)
Capacity:	1 Ton	1 Ton	1 Ton	1 Ton
Compressed Spring Diameter:	400 mm	400 mm	400 mm	400 mm
Compression Length:	210-570 mm	210-570 mm	210-570 mm	210-570 mm
N.W.:	30 kgs	31.5 kgs	30 kgs	31.5 kgs
G.W.:	34 kgs	35.5 kgs	34 kgs	35.5 kgs
Package Size:	1190x290x220 mm	1190x290x220 mm	1190x290x220 mm	1190x290x220 mm
QTY/20'CY:	300PCS	300PCS	300PCS	300PCS

Model:	TRK3211
Capacity:	1 Ton
Ram Stroke:	150 mm
Compressed Spring Diameter:	100-200 mm
Working Length:	290 mm
N.W.	24.5 kgs
G.W.:	25.5 kgs
Package Size:	700x190x250 mm
QTY/20'CY	800 PCS

Pick -up Truck Crane

TRF2108
0.5 Ton

TRF30603
0.5 Ton

TRF30605
1 Ton

TRF30604
1 Ton

Model	Capacity	Min. Height (mm)	Max. Height (mm)	N.W. / G.W. (kgs)		Package Size (mm)		QTY/20'CY (PCS)	MOQ (PCS)
TRF2108	0.5 Ton	870	1800	43 / 45		1070x270x210		350	-
TRF30603	0.5 Ton	0	2015	1# 7.5 / 8.7	2# 29 / 30	1# 290x290x330	2# 1090x270x200	290	20
TRF30605	1 Ton	180	1710	1# 13 / 14	2# 33 / 35	1# 340x330x320	2# 1130x280x180	200	50
TRF30604	1 Ton	0	2300	1# 18 / 20	2# 35 / 37	1# 275x275x310	2# 1260x300x240	200	20

Mini Tilting Lift

TAL15001
1500 Kgs

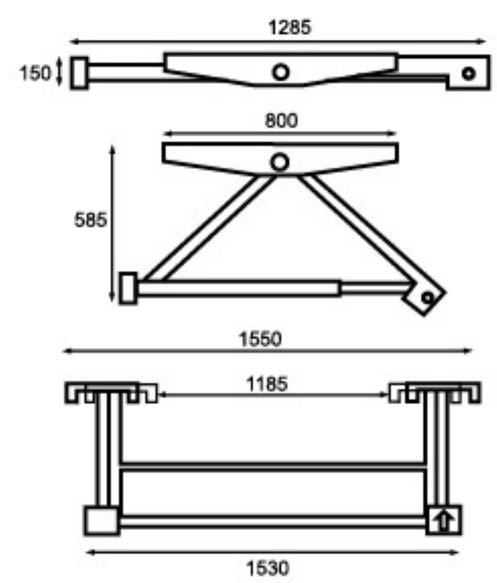

Model	Capacity	Net Weight (kgs)	Gross Weight (kgs)	Package Size (mm)	QTY/20'CY (PCS)
TAL15001	1500 kgs	58	75	1700x860x260	33

Mini Car Lift

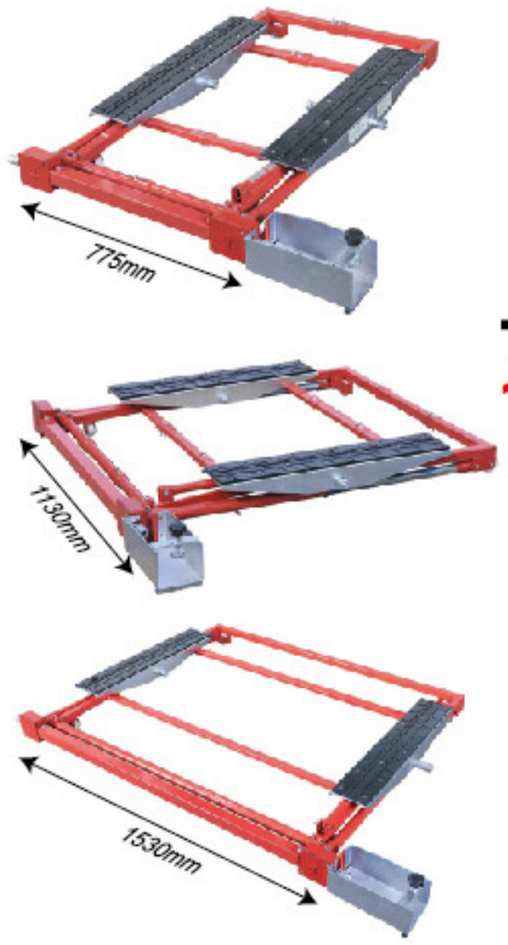

TAL15001D
1500 kgs

Model:	TAL15001D
Capacity:	1500 kgs
MIN.H:	150 mm
MIN.H:	585 mm
Length:(adjustable)	775/1130/1530 mm
G.W:	92 kgs
N.W:	67 kgs
Package Size:	1350x900x180 mm
QTY/20'CY:	108 PCS

Model:	TAL20001
Capacity:	2000 kgs
MIN.H:	150 mm
MIN.H:	585 mm
Length:	1530
G.W:	86 kgs
N.W:	59 kgs
Package Size:	1600x880x280 mm
QTY/20'CY:	88 PCS

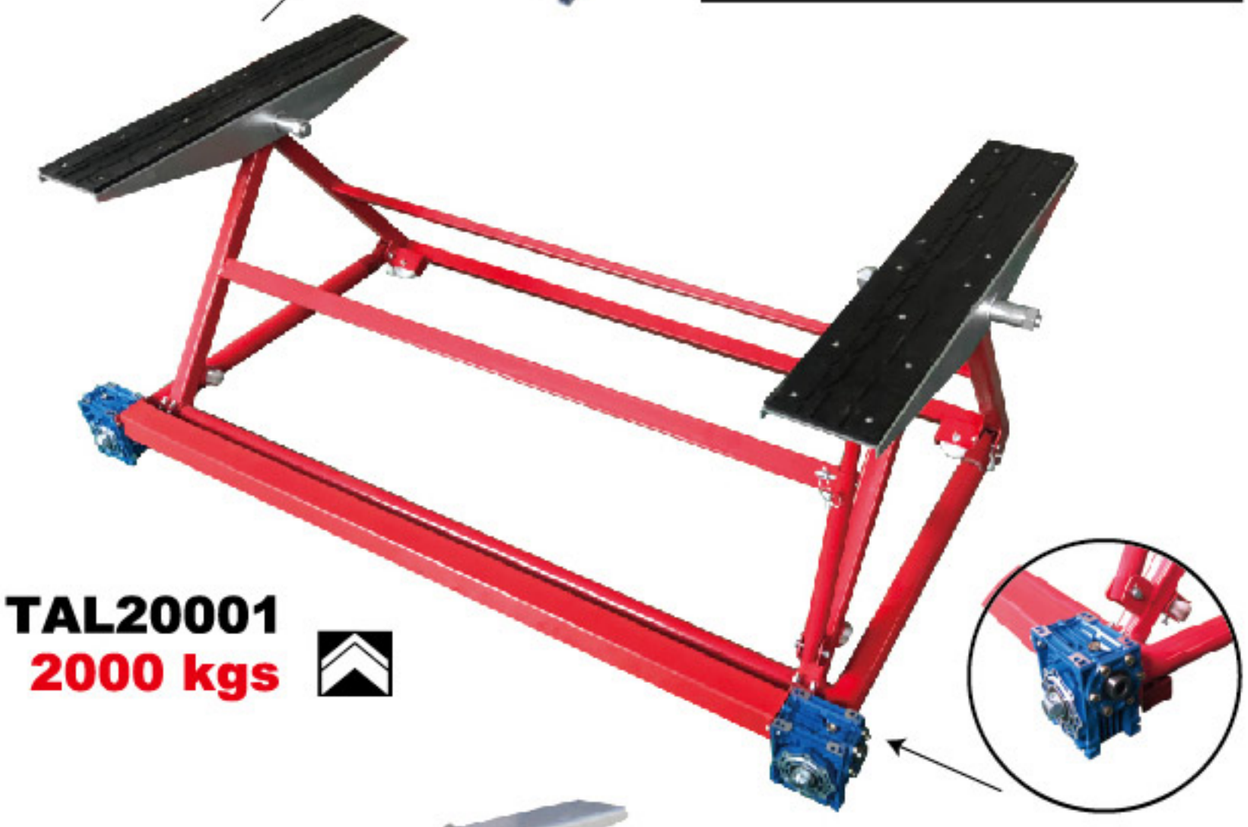

TAL20001
2000 kgs

Model:	TAL20001-1
Capacity:	2000 kgs
MIN.H:	150 mm
MIN.H:	585 mm
Length:	775/1130/1530 mm
G.W:	92 kgs
N.W:	68 kgs
Package Size:	1390x890x280 mm
QTY/20'CY:	108 PCS

TAL20001-1
2000 kgs

TAL30001
3000 kgs

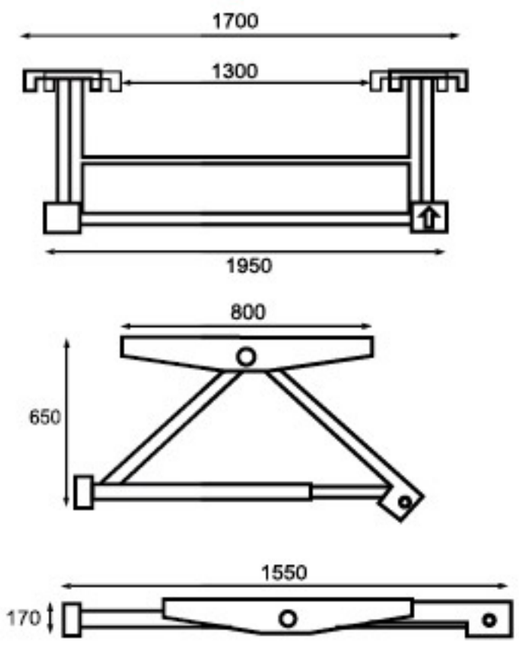

Model:	TAL30001
Capacity:	3000 kgs
MIN.H:	175 mm
MIN.H:	650 mm
Length:	1700 mm
G.W:	160 kgs
N.W:	125 kgs
Package Size:	1770x1060x220 mm
QTY/20'CY:	80PCS

Telescoping Gantry Crane

Lock the Pin

Pull lift the Crane

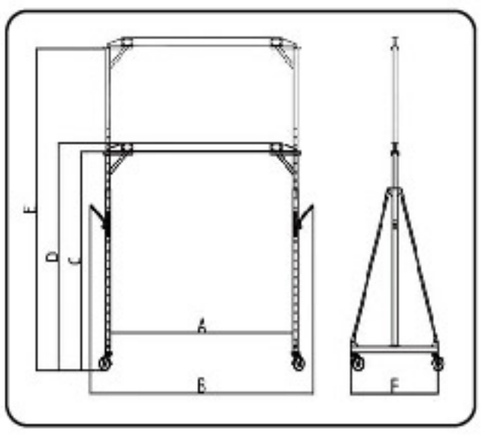

- All-steel construction
- Adjustable height
- Quick assembly and disassembly for easy transport
- Auto-lock to keep unit secure
- Relatively light weight crane goes where forklifts can't
- Super-strong swivel casters (2 locking) with rubber for smooth rolling
- Do not move while loaded

Model	Capacity (kgs)	Min. Height (C) mm	Max. Height (E) mm	Distance Between Posts (A) mm	Caster Size (inch)	N.W. / G.W. (kgs)	Product Size (BxFxD) mm	Package Size (mm)	QTY/20'CY (PCS)	MOQ (PCS)
TRAL0500	500	2425	3625	2410	4	111 / 128.5	3130x1200x2525	2270x440x225	75	/
TRAL1130-1	1000	2384	3625	2335	5	236 / 270	2623x1380x2155	2860x640x360	36	36
TRAL1000	1000	2395	3595	2390	5	128 / 143	3120x1200x2315	2270x510x210	67	67
TRAL2000	2000	2395	3595	2370	5	167 / 171	3120x1200x2555	2250x510x270	56	56

Auto Twirler

The Auto Twireler is a universal restoration rotisserie that lets user twirl a car body or body/frame 360 and lock in any position to allow easy access to hard-to-reach areas,Makes welding,rust vrepair,scraping,blasting,cleaning,painting and other restoration tasks much easier,Holds up to 1 ton.Can be made short enough to hold a truck cab,or extended up to 20 feet to hold a full-sized 1960s Ameriacn muscle car. Rolls on 6 heavy-duty swivel casters. Plus model includes two 3-ton hydraulic jacks.2 balancer attachments.Requires 8-ft, ceiling and 1702 mm base width for clearance.

TRAL15003
1 Ton

Model	Capacity	Min. Height (mm)	Max. Height (mm)	Adjusting Width (mm)	Adjusting Length (mm)	N.W. / G.W. (kgs)	Package Size (mm)	QTY/20'CY (PCS)
TRAL15003	1 Ton	520	1280	420 - 1240	3600 - 5000	225 / 260	1880x825x400	30

Car Mini Lift

CE

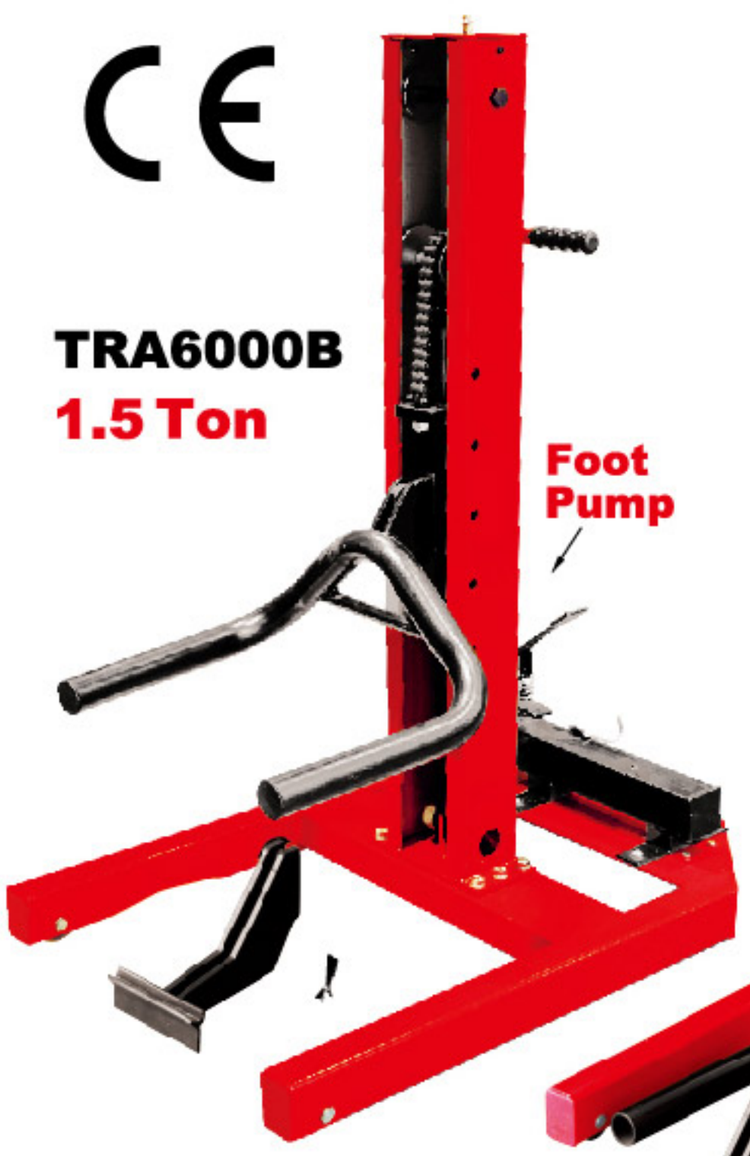

TRA6000B
1.5 Ton

TRA6000
1.5 Ton

PNEUMATIC

Air Bumper Jack

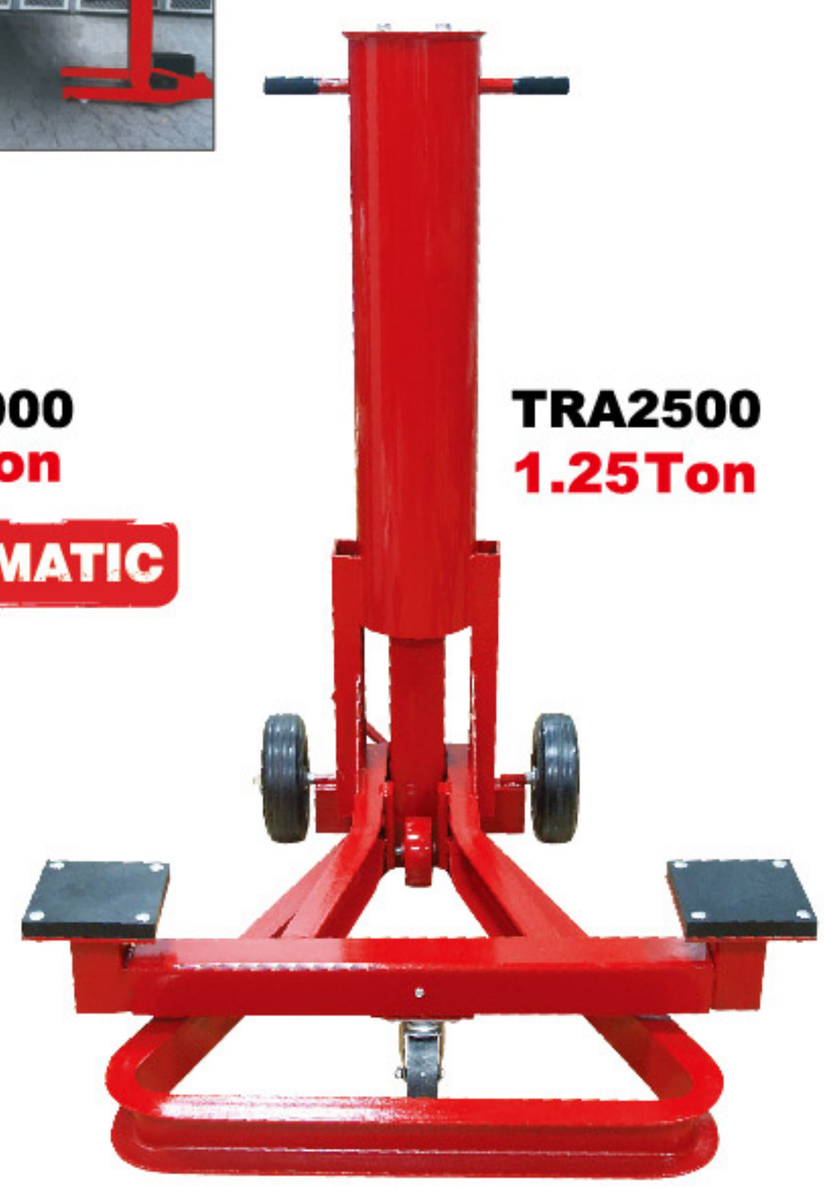

TRA2500
1.25Ton

Model	Capacity	Max. Height (mm)	N.W. / G.W. (kgs)	Package Size (mm)	QTY/20'CY (PCS)	MOQ (PCS)
TRA6000	1.5 Ton	1100	110 / 115	1110x730x300	100	5
TRA6000B	1.5 Ton	1100	110 / 115	1110x730x300	100	5

Model	Capacity	Min.H (mm)	Max.H (mm)	Lifting.H (mm)	N.W. / G.W. (kgs)	Package Size (mm)	QTY/20'CY (PCS)
TRA2500	1.25 Ton	280	1080	800	88 / 89	950x940x1200	20

Fender Reforming Tool

TRF06011

Model:	TRF06011
N.W.:	7 kgs
G.W.:	8 kgs
Package Size:	370x350x150 mm
QTY/20'CY:	1500 PCS

Instroduction:

1.Use for fender collision repair or fender or to increase fender clearance;
2.Fit most cars and light trucks with 4 or 5 lugs;
3.Simple and easy to use;
4.Roller works on fender from inside wheel well;
5.Attached hitch pin allows for wide or narrow angle;
6.Adjustable arm has second telescoping arm with roller that allows for 180 degrees wheel swivel

Frame Straightener

Model:	TW10001
Capacity:	10 Ton
N.W.:	165 kgs
G.W.:	190 kgs
Package Size:	3030x400x330 mm
QTY/20'CY:	50 PCS

CE

TW10001
10 Ton

100° Angle

TW10002
10 Ton

Model:	TW10002
Capacity:	10 Ton
N.W.:	170 kgs
G.W.:	200 kgs
Package Size:	3040x400x330 mm
QTY/20'CY:	50 PCS

Frame Straightrner

Small size, light weight, convenient operation, single person can use.
Serrated chain fixing system to improve chain adjustability.
The support frame and the lifting support frame can assist in shaping the repair parts, which is convenient for maintenance. Simple design is pratical for light body repair.
Speed and efficient cosmetic body repair equipment.
Meeting the request for the refurbishment of the body panels.
Balanced pulling strength (easy and effortless).
Long pulling stroke, weide repair area and can do down pull.
No limit by the compressure air resource, no need of the externel air power

Model:	TRFTD3
N.W.:	50 kgs
G.W.	56 kgs
package Size:	1205x422x245 mm
QTY/20'CY:	176 PCS

carton box

This product is a perfect combination of ultra-thin scissor lift and auto collision equipment!
Auto body quick repair + body chains shop preferred professional equipment!
This equipment is the best sales body straightening equipment in European and American developed countries.
The equipment is widely used in: automobile 4S shops, large automobile chain centers, automobile sheet spray quick repair chain shops, vocational education training centers.
This equipment can not only repair various types of accident vehicles, but also works as a vehicle lift, which is convenient for the disassembly, replacement and assembly of body sheet metal parts; at the same time, it can also perform automobile chassis maintenance and oil replacement.
Ultra-thin lifting, small body and big energy! Can easily lifting up 4000kg rated load.
5 degrees of freedom mechanical pull tower, the pulling force can reach 100KN, makes the body pulling very easily!
Efficient work, comfortable man-machine experience! Can meet the work of various height mechanics

Model:	TRTP3140
N.W. #1:	530 kgs
G.W. #1:	568 kgs
package Size #1:	1840x650x690 mm
N.W. #2:	45 kgs
G.W. #2:	52 kgs
package Size #2:	520x420x1120 mm
N.W. #3:	900 kgs
G.W. #3:	950 kgs
package Size #3:	3160x960x230 mm
QTY/20'CY:	12 PCS

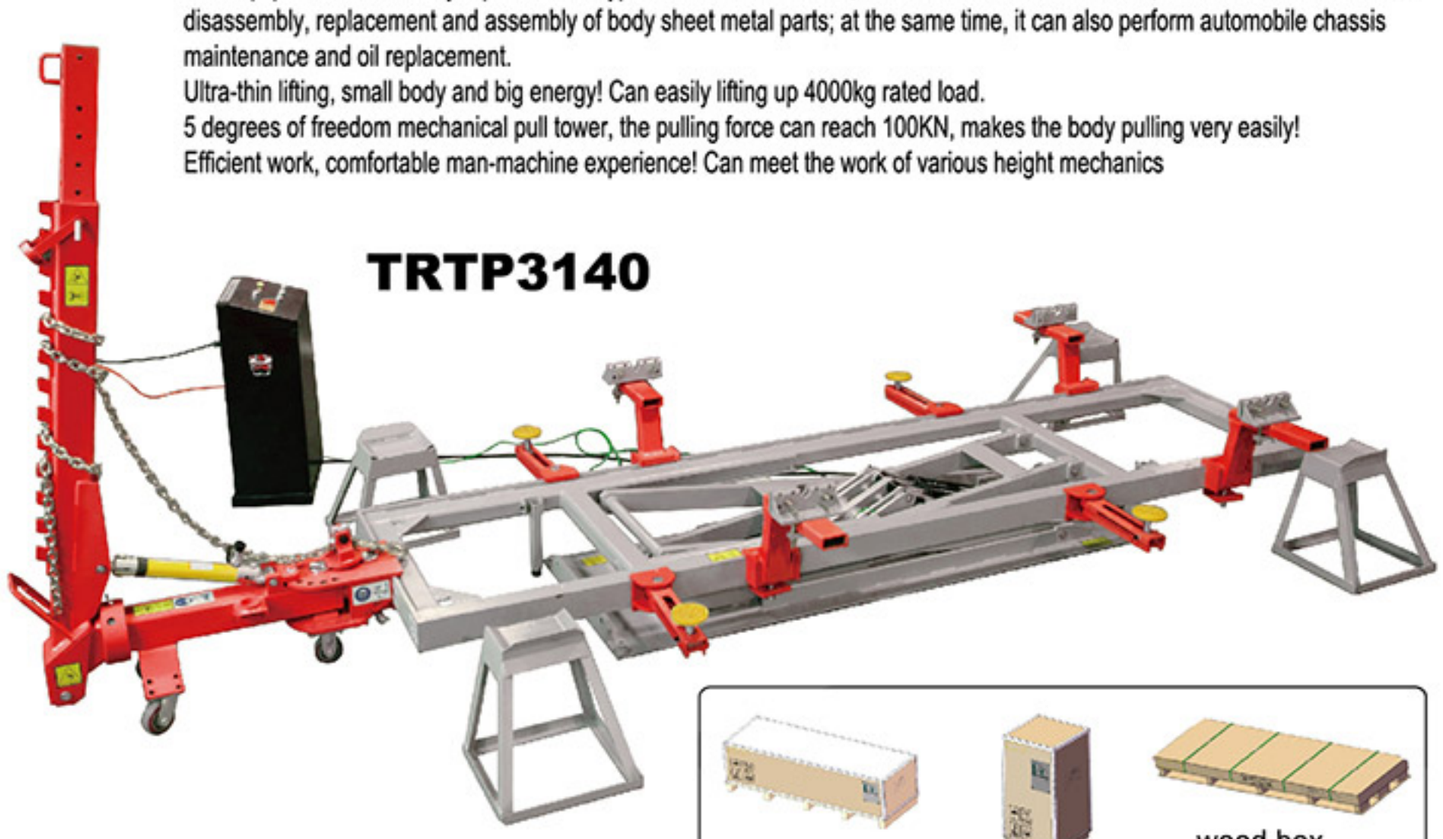

wood box

Floating anchor type fixed system, 5000x700mm working space, convenient and fast installation, space saving
35CrMo alloy steel anchoring pad for high strength and better durability.
Length extended anchoring clamp fixing plate for more application.
Clamp jaw made from 35CrMo alloy steel for better anchoring and high wear resistance. Clamp height can be adjustable
Pulling tower made from Q355B alloy steel for easy and flexible operation and can pull the damaged car from any angle.
10 Ton pulling force of the pulling tower provide efficient body repair.
Equipped with 5m G80 Chains for safe and reliable pulling.

Model:	TRD5000
N.W.:	538 kgs
G.W.:	580 kgs
package Size:	2030x745x450 mm
QTY/20'CY:	40 PCS

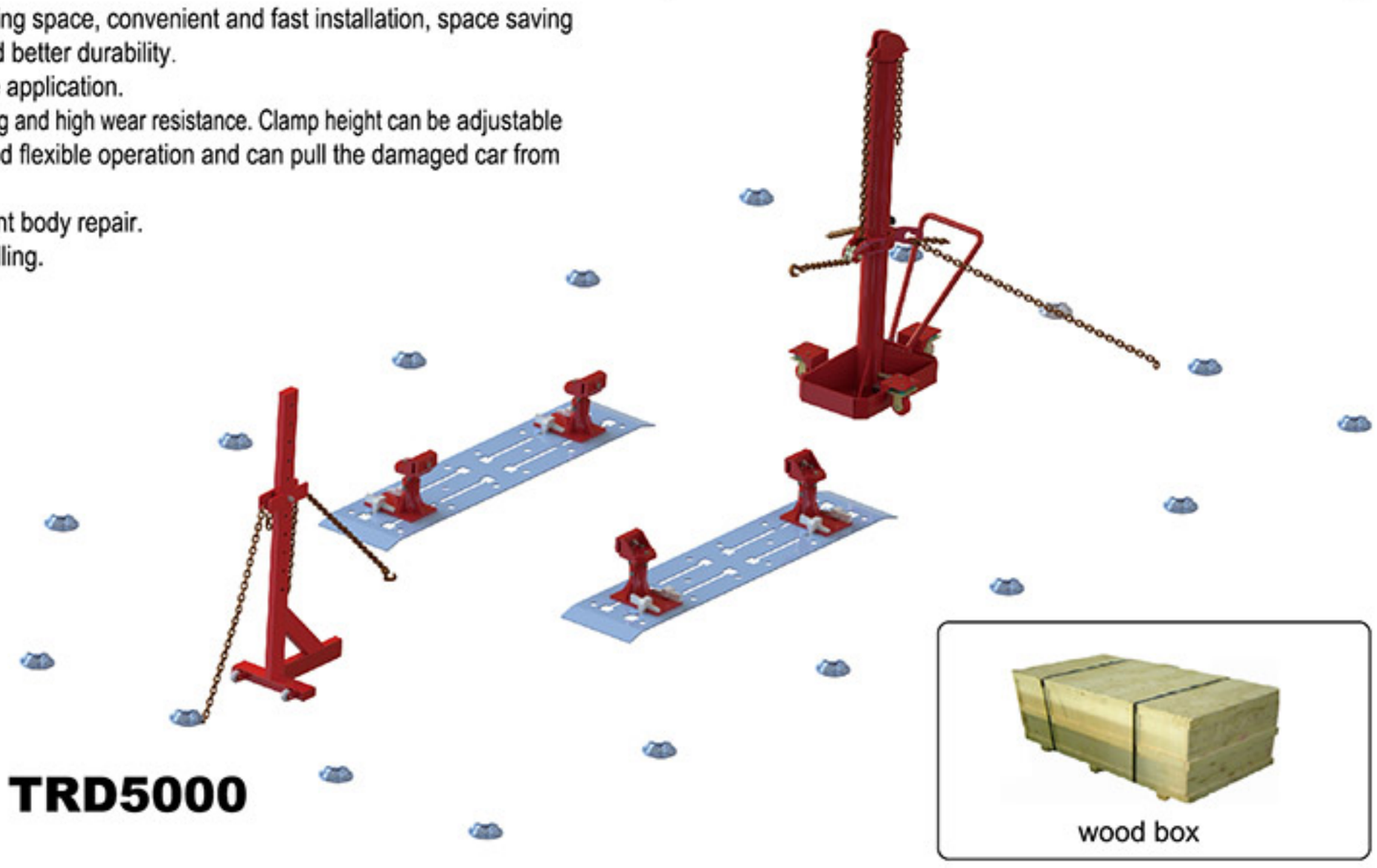

wood box

Hydraulic Pipe Bender

TRM03003-2
16 Ton

NEW PRODUCT

TSWG-1 10 Ton
TSWG-2 16 Ton
TSWG-3 18 Ton
TSWG-4 20 Ton

Dual Pump

Model:	TRM03003-2
Package Size:	770x360x235 mm
N.W.:	67 kgs
G.W.:	72 kgs
QTY20'CY:	270 PCS

Mould Size

Metric system (mm)	British System (in)	Outer Diameter (mm)	Thickness (mm)	Pipe bending Angle (a)	Working Pressure (Mpa)	Stroke (mm)
15	1/2"	21.25	2.75	π/2<a<π	61	285
20	3/4"	26.75	2.75	π/2<a<π	61	285
25	1"	33.50	3.25	π/2<a<π	61	285
32	1-1/4"	42.25	3.25	π/2<a<π	61	285
40	1-1/2"	48	3.50	π/2<a<π	61	285
50	2"	60	3.50	π/2<a<π	61	285
65	2-1/2"	75.50	3.75	π/2<a<π	61	285
80	3"	88.50	4	π/2<a<π	61	285

Model	Capacity	Stroke (mm)	Bending Pipe size(mm)	Mould size	Pipe thickness (mm)	N.W./G.W. (kg)	Package size (mm)
TSWG-1	10 Ton	160	Φ13-Φ14	1/4",5/6",3/8",1/2",3/4",1"	2 - 5	19/20	490x245x145
TSWG-2	16 Ton	230	Φ22-Φ60	1/2",3/4",1",1¼",1½",2"	2.5 - 5	45/47.5	730x320x165
TSWG-3	18 Ton	320	Φ22-Φ89	1/2",3/4",1",1¼",1½",2", 3"	2.5 - 5	94/97	930x390x210
TSWG-4	20 Ton	380	Φ22-Φ114	1/2",3/4",1",1¼",1½",2", 3",4",5"	2.5 - 6	160/170	1220x410x250

TRA0802
8 Ton

TRA0802S
8 Ton

Model:	TRA0802	TRA0802S
Capacity:	8 Ton	8 Ton
N.W.	20 kgs	22 kgs
G.W.:	21 kgs	25 kgs
Package Size:	510x520x160 mm	615x590x165 mm
QTY/20'CY':	620 PCS	450 PCS

Hydraulic Pipe Bender

TRA1202
12 Ton

Model:	TRA1202
Capacity:	12 Ton
N.W.	32 kgs
G.W.:	34 kgs
Package Size:	650x560x200 mm
QTY/20'CY':	420 PCS

TRA1502
15 Ton

Model:	TRA1502
Capacity:	15 Ton
N.W.	58 kgs
G.W.:	61 kgs
Package Size:	690x630x220 mm
QTY/20'CY':	270 PCS

CE

Compact tubing bender

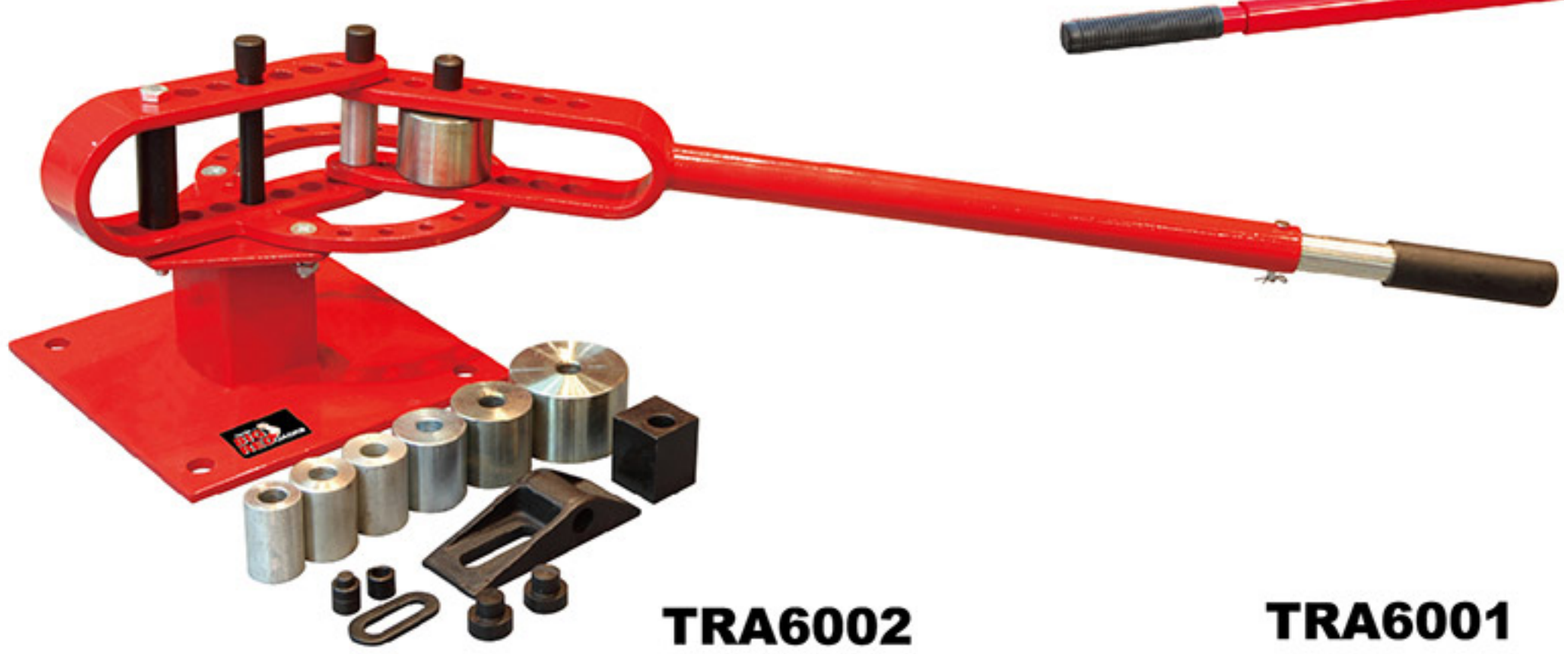

TRA6002

Model	TRA6002
Die Size:	25.4mm,31.75mm,38.1mm,44.45mm, 50.8mm,63.5mm,67mm
N.W.:	16 kgs
G.W.:	18 kgs
Package Size:	700x280x130 mm
QTY/20'CY:	850 PCS
MOQ:	30 PCS

TRA6001

Model	TRA6001
Die Size:	25.4mm,31.75mm,38.1mm,44.45mm, 50.8mm,63.5mm,67mm
N.W.:	24 kgs
G.W.:	26 kgs
Package Size:	920x280x270 mm
QTY/20'CY:	650 PCS
MOQ:	30 PCS

Auto Multi-functional Paint Stand

Nonpolar rotation;PU universal brake wheel move freely;Handle,pedal adjustment lock anywhere;Brace bar height is adjustable.Fix engine hood,panel etc;Process both polishing and painting on the stand, can move to spray booth freely.

TRX010001 Size:6+2
Package Size: 1230X300X170mm
N.W.:28 kgs
G.W.:30 kgs

TRX010002 Size:8+2
Package Size: 1970X320X180mm
N.W.:33 kgs
G.W.:34.5 kgs

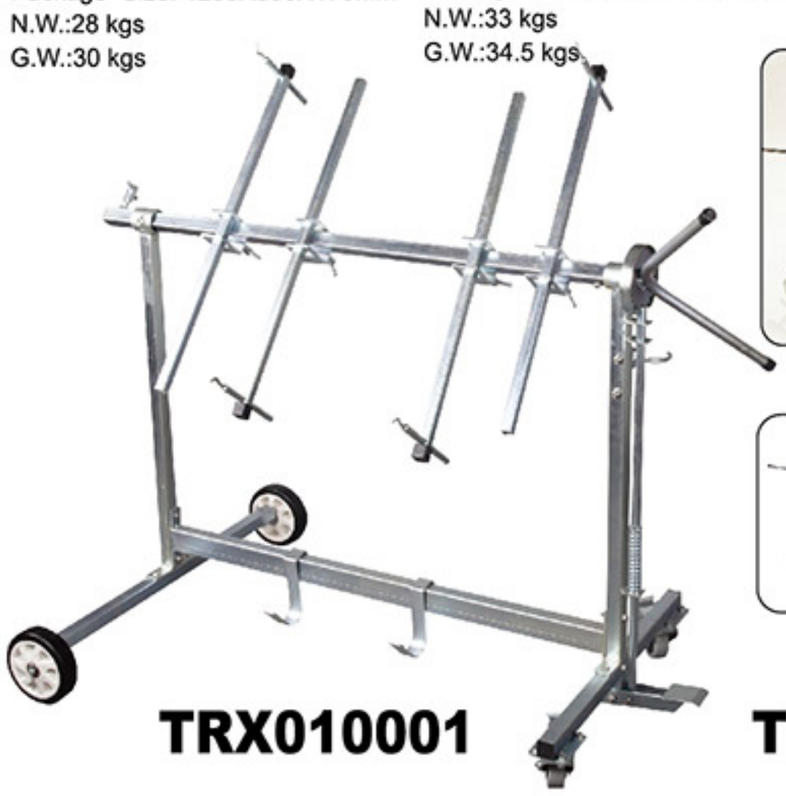

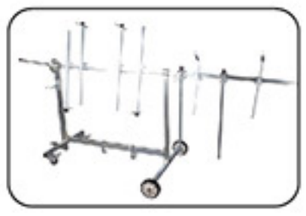

TRX010001 TRX010002

X Shape Engine Hood And Windshield Stand

This stand is used for laying windshield or engine hood;4 universal wheels make it easy to move;Width and height can be ajustable freely;Top contact surface is rubber,to avoid scratches. (Mainly used for windshield moving and making adhesive)

Package Size: 1060x320x130 mm
N.W.:15 kgs
G.W.:16.4 kgs

5mm Silica gel

TRX010021

Professional Bumper Paint Stand

This is a professional paint stand for all kinds of bumpers;Can move freely with wheels;Two srew hooks on the stands(to hook fixed holes and fasten),below part has two fixed clips,left and right sides have anti distortion semicircle crown bar;all hooks,clips,and stand angles are adjustable.

Package Size: 1270x510x170 mm
N.W.:21 kgs
G.W.:22 kgs

TRX010022

Engine Hood,panel,fender Paint Stand

This is a specified paint stand for engine hood, door panel,and fender,convenient and practical

Package Size: 1470x400x210 mm
N.W.:22 kgs
G.W.:23.5 kgs

TRX010023

Bumper Polishing Stand

This stand can hold all kinds of bumpers by adjusting pipes and lifting bars;For polishing and painting;Special wheel design makes moving freely,and can enter into spray booth directly.

Package Size: 830x420x110 mm
N.W.:14 kgs
G.W.:14.5 kgs

TRX010070

X Shape Locking Polishing Stand

This stand suits bumper polishing and other accessories short time placing.

Package Size: 128x620x100 mm
N.W.:12 kgs
G.W.:13.6 kgs

TRX010071

Multilayer Bumpers Laying Stand

This is a realistic stand to store bumpers and other body kits,the distance from rack to rack is ajustable based on requests,sturdy and durable wheels make stands move freely in workshop,save space and make workshop more tidy and cleaner,it is a necessary equipment for professional auto painting work shops.

Package Size: 1230x300x190 mm
N.W.:31 kgs
G.W.:32.7 kgs

TRX020001

Tire Rack(4 Tires)

Convenient for tires placing and application in daily repairing.
Package Size: 184X400X170 mm
N.W.:33 kgs
G.W.:35 kgs

TRX020011

X Shape Laying Stand

This X shape stand is made of steel pipes which are bended and powder coated. Adjusting the chains over two sides makes different heights. The stand is covered with PU, which protects bumpers and windshields against scratching.
diameter 25 mm
thickness 2mm
Package Size: 1070x500x90 mm
N.W.:11.5 kgs
G.W.:12.8 kgs

TRX020020

Removable Accessorier Washing Table

It is convenient for spare parts daily washing/assembling,with oil collecting pot.
Package Size: 1020x620x770 mm
N.W.:58 kgs
G.W.:60.8 kgs

Drawer for the selection of accessories

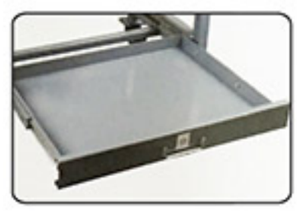

The lower level is a mobile platform.

TRQ030015

Accident Vehicle Moving Dolly

Made of galvanized sheet by laser cutting and edge curving,assembled with heavy duty PU universal wheels. Left and right sides can be extended freely.
Moving accident cars easily (front wheels and rear wheels damaged)
Improving workshop utilization rate.

Material:
6mm galvanized sheet, 6inches universal heavy duty wheels;
Loading capacity: 2 ton
Package Size: 135x280x230 mm
N.W.:77 kgs
G.W.:79.6 kgs

TRX030021
2 Ton

Accident Vehicle Single Moving Dolly

Made of 8mm angle steel by opposite angle welding;
Assembled with heavy duty PU universal brake casters;
Matched with 2 sets connectors with 3 methods to fix vehicles.

5 inches universal heavy duty casters
Loading capacity: 1.5 ton
Package Size: 460x590x530 mm
N.W.:76 kgs
G.W.:78.5 kgs

TRF030023
1.5 Ton

Shortwave Infrared Curing Lamp

TRSG1DS

TRSG2DS

TRSG3DA

TRSG2D

- Made from Aluminum alloy, 304 stainless steel mirror reflector and other special material.
- Applying to drying the painting work for spot damage from the car body, avoiding the heating up the whole spray booth which highly reduce the cost
- Suitable for drying the spot damage under one area of three panels.
- Unique electronic timer, digital control system for half-power or full-power optional; Each emitter can be independently controlled.

TRSG3D

CE

Model	Input Voltage	Rated Power	Frequency	Rated Power	Adjustable Height	Preheating Time	Curing Distance	Working Current	Curing Temperature	Curing Area	Package Size (LxWxH)	N.W/G.W
TRSG1DS	1PH110V/1PH220V	800W	50Hz/60Hz	800W	200-1500mm	1-5min	600-800 mm	4A	60-70℃	600X800 mm	485X445X265 mm	4kgs/6kgs
TRSG2DS	1PH110V/1PH220V	2000W	50Hz/60Hz	2000W	200-1700mm	1-5min	600-800 mm	5-10A	60-70℃	800X800 mm	840X590X380 mm	21kgs/23kgs
TRSG3DA	2PH220V	3000W	50Hz/60Hz	3000W	200-2500mm	1-5min	600-1000 mm	5-15A	60-70℃	800X1000 mm	1570X590X150 mm 1020X815X325 mm	13kgs /18kgs 23kgs / 28kgs
TRSG2D	1PH110V/1PH220V	2000W	50Hz/60Hz	2000W	200-1500mm	1-5min	600-1000 mm	5-10A	60-70℃	800X800 mm	835X560X360 mm	21kgs/24kgs
TRSG3D	2PH220V	3000W	50Hz/60Hz	3000W	200-2500mm	1-5min	600-1000 mm	5-15A	60-70℃	800X1000 mm	1570X590X150 mm 1020X815X325 mm	13kgs /18kgs 25kgs /30kgs

IGBT Inverter Welder

Description

1 PHASE | INVERTER | 50/60 Hz | MIG-MAG | FLUX | MMA DC | DC | WIRE

CE

MMA INVERTER

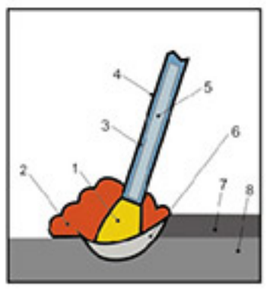

1.Welding arc
2.Gaseous protection
3.Coating
4.Electrode
5.Core
6.Melting pool
7.slag
8.Base material

TRYD-MMA140

TRYD-MMA160

TRYD-MMA180

Model	Main Voltage	Frequency	Input voltage	Input current	Rated input power capacity	Out-put current	No-load voltage	Electrode	N.W/G.W (kgs)	Package Size (mm)	QTY/20'CY (PCS)	MOQ
TRYD-MMA140	220v	50/60 Hz	220V±15%	26.2	5.8	20-140	65±5	1.6-3.2	4.4/5.4	750x365x275	1400	200
TRYD-MMA160	220v	50/60 Hz	220V±15%	30	6.8	20-160	65±5	1.6-4.0	4.6/5.6	750x365x275	1400	200
TRYD-MMA180	220v	50/60 Hz	220V±15%	30	7.8	20-180	65±5	1.6-5.0	4.8/5.8	750x365x275	1400	200

MIG/MAG Welder

Description

1 PHASE | INVERTER | MMA DC | 50/60 Hz | MIG-MAG | DC | WIRE | FLUX

MMA INVERTER | MIG INVERTER

TRYD-MIG175

TRYD-MIG205

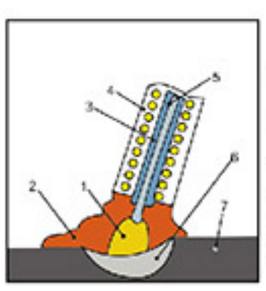

1.Welding arc
2.Gontact tip
3.Contact tip
4.Nozzle
5.Wire electrode
6.Meltingpool
7.Solidified deposit

CE

Model	Main Voltage	Frequency	Input voltage	Input current	Rated input power capacity	Out-put current	No-load voltage	Electrode	Wire (mm)	N.W/G.W (kgs)	Package Size (mm)	QTY/20'CY (PCS)	MOQ
TRYD-MIG175	220v	50/60 Hz	220V±15%	25.7	5.7	MIG:50-160 MMA:20-140	65±5	1.6-3.2	0.6/0.8	10/11	510x305x420	400	50
TRYD-MIG205	220v	50/60 Hz	220V±15%	32.7	7.2	MIG:50-200 MMA:20-160	65±5	1.6-4.0	0.6/0.8/1.0	10/11	510x305x420	400	50

Automobile Spot Welder

TRSG60L

TRSG65L

TRSG8500

TRSG8900

TRSG13000

Model	Input Voltage	Rated Power	Frequency	Floating Voltage	Welding Current	Max Output Power	Duty Cycle	Auto Working Time	Package Size (LxWxH)m	N.W/G.W
TRSG60L	2PH220V/380V	5KVA	50Hz/60Hz	6-11.5V	200-3800A	10.9KVA	15%	0.1-2.5s	490X400X660 mm	47 kgs/53 kgs
TRSG65L	2PH220V/380V	5KVA	50Hz/60Hz	6-11.5V	200-4200A	11KVA	15%	0.1-2.5s	630X490X700 mm	55 kgs/64 kgs
TRSG8500	2PH220V/380V	5KVA	50Hz/60Hz	6-12V	200-8500A	20KVA	15%	0.1-2.5s	580X440X920 mm	60 kgs/73 kgs
TRSG8900	2PH220V/380V	5KVA	50Hz/60Hz	6-12.5V	200-8900A	20KVA	15%	0.1-2.5s	650X490X1020 mm	70 kgs/84 kgs
TRSG13000	2PH220V/380V	5KVA	50Hz/60Hz	6-15V	200-13000A	25.5KVA	15%	0.1-2.5s	720X560X1020 mm	118kgs/134kgs

Mig Welding Machine

TRNBC5250

TRIGBT315

DENT PULLING MACHINE ---Technical Parameters

Model	Input Voltage	Frequency	Rated Power	Floating Voltage	Welding Current	Current Range	Duty Cycle	Welding Diameter	Welding Thickness	Package Size(LxWxH)	N.W/G.W
TRNBC5250	3PH380V/2PH220V	50Hz/60Hz	17.5A	16-26.5V	250A	40-250A	60%	φ0.8mm/φ1.0mm	0.5-5mm	980X560X930mm	81kgs/102kgs
TRIGBT315	3PH380V/2PH220V	50Hz/60Hz	19.5A	16-29.5V	315A	40-315A	60%	φ0.8mm/φ1.0mm	0.5-6mm	950X530X900mm	72kgs/90kgs

Plasma Cut

TRYD-CUT40

TRYD-CUT60

Model	Main Voltage	Frequency	Input voltage	Input current	Rated input power capacity	Out-put current	No-load voltage	Cutting thickness (mm)	N.W/G.W (kgs)	Package Size (mm)	QTY/20'CY (PCS)	MOQ
TRYD-CUT40	220v	50/60 Hz	220V±15%	27.6	4.61	10-40	330	12	8.8/9.8	0.06	465	30
TRYD-CUT60	220v	50/60 Hz	220V±15%	38	6.6	20-55	350	20	28.94/30.94	0.12	235	30

Battery Charger

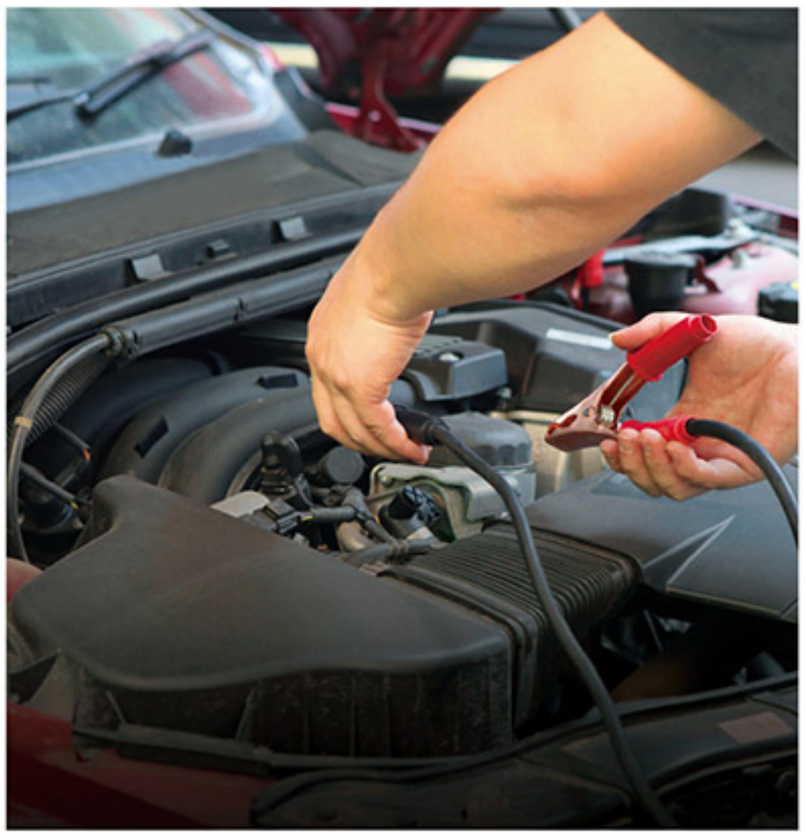

TRYD-CD450

TRYD-CB20

TRYD-CB50

Model	Input voltage	Input power frequency	AC power inPut	Rated charging current	Effective charging current	Charging voltage	Package Size (mm)	QTY/20'CY (PCS)	MOQ
TRYD-CB20	AC220	50/60	300	18	12	6.56/7.56	0.05	560	100
TRYD-CB50	AC220	50/60	1000	45	35	9.32/10.32	0.06	465	100
TRYD-CD450	AC220	50/60	1600	50	40	16/17.4	0.09	310	50

Booster Cable

TRWD0047

Specification	
Cable:	16MM2 200A
Length:	3 m
Package Size:	280X280X240 mm
QTY/CTN:	5 PCS
N.W/G.W PER CTN:	6/7 kgs
QTY/20'CY:	6800 PCS
MOQ:	500 PCS

TRWD0048

Specification	
Cable:	25MM2 300A
Length:	3.5 m
Package Size:	310X310X260 mm
QTY/CTN:	5 PCS
N.W/G.W PER CTN:	9/10 kgs
QTY/20'CY:	5200 PCS
MOQ:	500 PCS

TRWD0049

Specification	
Cable:	35MM2 400A
Length:	4.5 m
Package Size:	340X340X230 mm
QTY/CTN:	4 PCS
N.W/G.W PER CTN:	12/13 kgs
QTY/20'CY:	3850 PCS
MOQ:	500 PCS

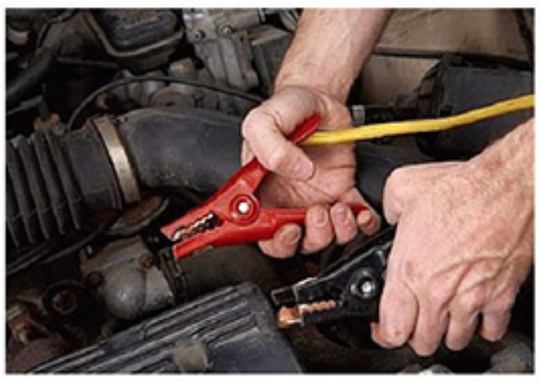

TRWD0200

Specification	
Cable:	0.25x70xOD7MM 200A
Length:	2.5 m
Package Size:	400X210X390 mm
QTY/CTN:	20 PCS
N.W/G.W PER CTN:	13/14 kgs
QTY/20'CY:	15700 PCS
MOQ:	500 PCS

TRWD0400

Specification	
Cable:	0.3x90xOD9MM 400A
Length:	2.5 m
Package Size:	460X240X480 mm
QTY/CTN:	20 PCS
N.W/G.W PER CTN:	18/19 kgs
QTY/20'CY:	9800 PCS
MOQ:	500 PCS

TRWD0600

Specification	
Cable:	0.3x130xOD11MM 600A
Length:	3 m
Package Size:	480X250X480 mm
QTY/CTN:	20 PCS
N.W/G.W PER CTN:	19/20 kgs
QTY/20'CY:	9800 PCS
MOQ:	500 PCS

TRWD0800

Specification	
Cable:	0.3x160xOD12MM 800A
Length:	4 m
Package Size:	580X280X580 mm
QTY/CTN:	10 PCS
N.W/G.W PER CTN:	20/21 kgs
QTY/20'CY:	5900 PCS
MOQ:	500 PCS

TRWD0010GA

Specification	
Cable:	0.31x61xOD7.5MM 10GA
Length:	12FT
Package Size:	480X250X220 mm
QTY/CTN:	10 PCS
N.W/G.W PER CTN:	9/10 kgs
QTY/20'CY:	10000 PCS
MOQ:	500 PCS

TRWD0008GA

Specification	
Cable:	0.31x95xOD8MM 8GA
Length:	12FT
Package Size:	480X250X220 mm
QTY/CTN:	10 PCS
N.W/G.W PER CTN:	11/12 kgs
QTY/20'CY:	10000 PCS
MOQ:	500 PCS

TRWD0006GA

Specification	
Cable:	0.31x160xOD9MM 6GA
Length:	16FT
Package Size:	300X300X330 mm
QTY/CTN:	6 PCS
N.W/G.W PER CTN:	12/13 kgs
QTY/20'CY:	5200 PCS
MOQ:	500 PCS

TRWD0004GA

Specification	
Cable:	0.31x242xOD10MM 4GA
Length:	16FT
Package Size:	310X310X330 mm
QTY/CTN:	6 PCS
N.W/G.W PER CTN:	13/14 kgs
QTY/20'CY:	4850 PCS
MOQ:	500 PCS

Safety Emergency Kit

TRTK-5004B-B09-6 6 Pieces

Inner Size:	465x105x205 mm
N.W.:	3 kgs
G.W.:	13 kgs (4PCS)
Package Size:	510x470x230 mm
QTY/CTN:	4 PCS
QTY/20'CY:	1959 PCS
MOQ:	1000 PCS

Contents

1PC Storage Bag
1PC Pair Gloves
1PC Warning Triangle E-mark
1PC Safety Vest EN471
1PC Tow Rope D03 2000kg
1PC Booster Cable 16mm²x3m

TRTK-8008 10 Pieces

Inner Size:	370x120x250 mm
N.W.:	3 kgs
G.W.:	13 kgs (4PCS)
Package Size:	450x380x250 mm
QTY/CTN:	4 PCS
QTY/20'CY:	2526 PCS
MOQ:	1000 PCS

Contents

1PC Storage Bag
1PC Pair Gloves
1PC Tow Belt D05 4500lbs 12FT
1PC Booster Cable 8GA 10FT
1PC Ice Scraper
1PC Snow Shovel
2PCS Toe Warmer
2PCS Hand Warmer

TRTK-8001 19 Pieces

Inner Size:	465x60x215 mm
N.W.:	3.5 kgs
G.W.:	15 kgs (4PCS)
Package Size:	470x250x230 mm
QTY/CTN:	4 PCS
QTY/20'CY:	3996 PCS
MOQ:	1000 PCS

Contents

1PC Storage Bag
1PC Head Lamp
1PC Pair Gloves
1PC Needle-nose Plier
1PC Poncho
1PC Knife
1PC Air Compressor
4PCS Tire Repair Kits
3PCS L Shape Wrench With 2 Sockets
4PCS Tyre Pressure Valve Cap
1PC Warnig Triangle E-mark

NEW PRODUCT

TRTK-8004 23 Pieces

Inner Size:	270x100x280 mm
N.W.:	1.35 kgs
G.W.:	12 kgs (8PCS)
Package Size:	560x300x430 mm
QTY/CTN:	8 PCS
QTY/20'CY:	2990 PCS
MOQ:	1000 PCS

Contents

1PC Dynamo LED Light
1PC Needle-nose Plier
1PC Spinner
10PCS Bits
5PCS Cable Tie
1PC Electrical Tape
1PC Pair Gloves
1PC Tyre Pressure Guage
1PC Triangle Bag
1PC Booster Cable 5mm²x2m

Safety Emergency Kit

TRTK-8013 — 28 Pieces

Inner Size:	260x120x330 mm
N.W.:	2.5 kgs
G.W.:	11 kgs (4PCS)
Package Size:	530x260x350 mm
QTY/CTN:	4 PCS
QTY/20'CY:	2239 PCS
MOQ:	1000 PCS

NEW PRODUCT

Contents

5PCS	Cable Tie	1PC	Air Compressor
1PC	Knife	1PC	Tape
1PC	Water Bag	1PC	Pair Gloves
8PCS	Fuses	1PC	Bag
1PC	Booster Cable 10GA 8FT	1PC	Warning Flash Light
2PCS	Screw Driver +-	1PC	Emergency Hammer
1PC	Long Nose Plier	1PC	Safety Vest
1PC	Poncho	1PC	Tow Rope

TRTK-8012 — 35 Pieces

Inner Size:	350x100x280 mm
N.W.:	1 kgs
G.W.:	10 kgs (10PCS)
Package Size:	560x500x350 mm
QTY/CTN:	10 PCS
QTY/20'CY:	2755 PCS
MOQ:	1000 PCS

Contents

1PC	Screw Driver	1PC	Battery Terminal Cleaner
10PCS	Bits	1PC	Battery Cable (4 gauge / 19")
9PCS	Sockets	1PC	Battery Wrench
8PCS	Fuses	1PC	Carry Case
1 PC	Storage Case	1PC	Booster Cable (4 gauge / 8ft)
		1PC	Warning Flash Light

TRTK-8005 — 47 Pieces

Inner Size:	280x125x165 mm
N.W.:	2.35 kgs
G.W.:	15 kgs (6PCS)
Package Size:	410x310x350 mm
QTY/CTN:	6 PCS
QTY/20'CY:	3642 PCS
MOQ:	1000 PCS

Contents

1PC	Storage Bag	36PCS	First Aid Kit:
1PC	Pair Gloves	1PC	First Aid Gauze
1PC	Dynamo LED Light	1PC	Adhesive Tape
1PC	5 in 1 Whistle	8PCS	Waterproof Assorted Plasters
5PCS	Cable Tie	3PCS	Non-adherent Sterile Pad
1PC	Foldable Shovel	3PCS	Antiseptic Cleaning Wipe
1PC	Booster Cable 6GA 10FT(#B03-2)	20PCS	Cotton Swab

TRTK-8011 — 47 Pieces

Inner Size:	300x90x170 mm
N.W.:	1.5 kgs
G.W.:	13 kgs (8PCS)
Package Size:	340x330x310 mm
QTY/CTN:	8 PCS
QTY/20'CY:	6210 PCS
MOQ:	1000 PCS

Contents

1PC Carry Bag
1PC Screw Driver
1PC Slip-joint Plier
1PC Work Gloves
1PC Booster Cable (8 gauge / 8ft)
1PC Warning Flash Light
1PC Cable Tie

36PCS First Aid Kit:
1PC First Aid Gauze
1PC Adhesive Tape
8PCS Waterproof Assorted Plasters
3PCS Non-adherent Sterile Pad
3PCS Antiseptic Cleaning Wipe
20PCS Cotton Swab

Air Compressor

Model	Voltage	Frequency	Power				Pressure		Tank		Package Size	N.W.	G.W.	QTY/20'CY
			Kw	Hp	Cfm	L/miN	Psi	Bar	L	GALON	LxWxH(mm)	Kgs	Kgs	PCS
TRAE024L	220	50	1.5	2	6.9	196	116	8	24	6	590x290x630	24	26	225
TRAE050BM	220	50	1.5	2	6.9	196	116	8	50	13	770x330x730	33	35	156
TRAE050VFL	220	50	2.2	3	13.9	392	116	8	50	13	770x380x740	41	43.2	126
TRAE100VFL	220	50	2.2	3	13.9	392	116	8	100	26	1090x400x840	54	57	50
TRAE100ZA	220	50	2.2	3	10.2	290	116	8	100	26	1090x450x840	64	67	50
TRAE150ZA	220	50	2.2	3	10.2	290	116	8	150	38.7	1400x520x950	103	106	32
TRAE020GB	220	50	1.5	2	6.9	196	116	8	77	20	550x420x1245	38	40	50
TRAE200TD	380	50	3	4	18.5	525	116	8	200	51.6	1400x540x1100	130	142	32
TRAE300VD	380	50	4	5.5	21.2	600	116	8	300	77.4	1700x570x1190	180	200	12

TRAE024L
24 L

TRAE050BM
50 L

TRAE050VFL
TRAE100VFL
50 L / 100 L

TRAE100ZA
TRAE150ZA **100 L / 150 L**

TRAE020GB
77 L

TRAE200TD **200 L**

TRAE300VD
300 L

Screw Air Compressor

■ NEVER DEMAGNETIZATION

The super energy saving machine adopts the permanent magnet motor made of the UH grade Nd-Fe-B magnet permanent magnet material, the temperature resistance is up to 180C, and the permanent magnet motor keeps high efficiency and magnetism for a long time, it never demagneti¬zation.

■ HIGH EFFICIENCY PERMANENT MAGNET SYNCHRONOUS MOTOR

There is no slip, no electric excitation, no fundamental iron in rotor, copper loss and less heat, which can reduce the loss of stator current and stator resistance. Its efficiency is 5~12 % higher than that of the same capacity asynchronous motor especially at low speed. The motor can still maintain a high efficiency.

■ MUTE

The super energy series operate safely with low noise: the noise is 68-74 decibels under the full load operation condition.

TRXLAM7.5A
TRXLAM10A

NEW PRODUCT

TRXLAM15A
TRXLAM20A

TRXLAM7.5ATD 350L
TRXLAM10ATD 350L

TRXLAM15ATD 500L
TRXLAM20ATD 500L

Model	motor power	displacement / discharge pressure		cooling method / drive mode		size（mm）	weight / noise		air outlet pipe diameter
	KW	(m3 / min) /	Mpa				Kg	/ d B(A)	
TRXLAM7.5A	5.5	0.79 / 0.8	0.69/1.0	air cooling	direct drive	840x600x850	185	62±2	G3/4"
TRXLAM10A	7.5	1.05/0.8	0.92/1.0	air cooling	direct drive	840x600x850	205	62±2	G3/4"
TRXLAM15A	11	1.61/0.8	1.4/1.0	air cooling	direct drive	910x700x1000	245	63±2	G3/4"
TRXLAM20A	15	2.13/0.8	1.87/1.0	air cooling	direct drive	910x700x1000	255	63±2	G3/4"
TRXLAM7.5ATD	5.5	0.79/0.8	0.69/1.0	air cooling	direct drive	1800x600x1560	370	63±2	G3/4"
TRXLAM10ATD	7.5	1.05/0.8	0.92/1.0	air cooling	direct drive	1800x600x1560	380	62±2	G3/4"
TRXLAM15ATD	11	1.61/0.8	1.41/1.0	air cooling	direct drive	1800x700x1750	505	63±2	G3/4"
TRXLAM20ATD	15	2.13/0.8	1.87/1.0	air cooling	direct drive	1800x700x1750	515	63±2	G3/4"

Air Impact Wrench

- Twin Hammer mechanism.
- Directional smelting manufacture, light and durable, high power.
- Easy adjustable power regulator.
- Ideal for general repair on cars, tires, and heavy equipment

TRZM2811S

Twin Hammer

TRZM2811

Twin Hammer

TRZM3900

TRZM3900S

Twin Hammer

TRZM751

Twin Hammer

TRZM780

TRFJ5040C

TRFJ3040C

Model	Square	Free Speed (r.p.m)	Bolt Capacity (mm)	Max Torque (N.m)	Hammer Mechanism	Air Inlet	Air Pressure	Anvil Length	Moment Bound (N.m)	N.W. (kgs)	G.W. (kgs)	Package Size (mm)	QTY/CTN (PCS)	QTY/20'CY (PCS)	MOQ (PCS)
TRZM2811S	1/2"	8000	16	550	Twin Hammer	1/4"	6-8kgs/cm²	1"	200-700	2.6	4.5	425x290x250	5	4000	100
TRZM2811	1/2"	8000	16	550	Twin Hammer	1/4"	6-8kgs/cm²	1"	200-700	2.6	3.2	420x275x205	5	4000	100
TRZM3900S	1/2"	8000	18	900	Twin Hammer	1/4"	6-8kgs/cm²	1"	200-750	2.1	4	425x330x300	5	3500	100
TRZM3900	1/2"	8000	18	900	Twin Hammer	1/4"	6-8kgs/cm²	1"	200-750	2.1	2.6	420x215x255	5	3500	100
TRZM751	3/4"	5300	32	1450	Twin Hammer	3/8"	6-10kgs/cm²	1.5"	600-1300	5.8	6.5	310x290x235	2	2600	100
TRZM780	1"	4600	33	1600	Twin Hammer	3/8"	6-10kgs/cm²	1.5"	500-1400	7.3	8	310x290x235	2	2200	50
TRFJ5040C	1/2"	8000	-	885	Twin Hammer	1/4"	6.5CFM	-	-	10.7	11.7	240x220x390	5	6430	500
TRFJ040C	1/2"	9000	-	1085	Twin Hammer	1/4"	8.5CFM	-	-	13	14	240X220X390	5	6430	500

Heavy Duty Air Impact Wrench

Pinless Hammer

TRZM550AL

Pinless Hammer

TRZM550ALS

Model	Square	Free Speed (r.p.m)	Bolt Capacity (mm)	Max Torque (N.m)	Hammer Mechanism	Air Inlet	Air Pressure	Anvil Length	Moment Bound (N.m)	N.W. (kgs)	G.W. (kgs)	Package Size (mm)	QTY/CTN (PCS)	QTY/20'CY (PCS)	MOQ (PCS)
TRZM550AL	1"	4200	41	2500	Pinless Hammer	1/2"	8-12kgs/cm²	8"	2900-1850	14	14.5	755X250X210	1	900	50
TRZM550ALS	1"	4200	41	2500	Pinless Hammer	1/2"	8-12kgs/cm²	8"	2900-1850	18	18.5	660X300X170	1	900	50

Pinless Hammer

TRZM5068

Pinless Hammer

TRZMA16L

- Roking dog structure.
- One of the most popular impact wrenches in the market.
- Suitable for screw and unscrew work of big truck and lorry. Also can be used in the maintenance of bus and general equipments of large machines.

Model	Square	Free Speed (r.p.m)	Bolt Capacity (mm)	Max Torque (N.m)	Hammer Mechanism	Air Inlet	Air Pressure	Anvil Length	Moment Bound (N.m)	N.W. (kgs)	G.W. (kgs)	Package Size (mm)	QTY/CTN (PCS)	QTY/20'CY (PCS)	MOQ (PCS)
TRZM5068	1"	3800	48	3000	Pinless Hammer	1/2"	8-12kgs/cm²	8"	1300-2600	17	18	755x250x210	1	400	50
TRZMA16L	1"	3600	50	3260	Pinless Hammer	1/2"	8-12kgs/cm²	8"	1300-2850	18.5	19.5	755x250x210	1	400	50

Pnematic Tools

Air Ratchet Wrench

TRFJ5058F

3/8" Air Ratchet Wrench
Square Drive: 3/8";
Free Speed: 160 rpm;
Max Torque: 90 Nm;
Avg. Air Consumption: 4cfm;
Weight: 1.21kg

NEW PRODUCT

TRFJ5059F Air Ratchet Wrench

1/2" Air Ratchet Wrench
Square Drive: 1/2";
Free Speed: 160 rpm;
Max Torque: 90 Nm;
Avg. Air Consumption: 4cfm;
Weight: 1.22kg

TRFJ7032F Air Die Grinder

1/4" (6mm) Air Die Grinder
Free Speed: 25,000rpm;
Collet Size: 1/4" (6mm);
Avg. Air Consumption: 4cfm;
Weight: 0.39 kgs

Dual Action Air Sander

TRFJ380F

6" Dual Action Air Sander
Sanding Pad: 6";
Free Speed: 10,000rpm;
Avg. Air Consumption: 5cfm;
Weight: 1.83 kgs

TRFJ991F Air Palm Sander

6" Air Palm Sander
Sanding Pad: 6";
Free Speed: 10,000rpm;
Avg. Air Consumption: 4.5cfm
Weight: 1.11kgs

Model	N.W/G.W (kgs) Per CTN	Package Size (mm)	QTY/CTN (PCS)	QTY/20'CY (PCS)	MOQ (PCS)
TRFJ5058F	12.1 / 13.1	320x290x160	10	18000	500
TRFJ5059F	12.2 / 13.2	320x290x160	10	18000	500
TRFJ7032F	7.9 / 8.9	310x205x255	20	33760	500
TRFJ380F	20 / 21	440x380x340	10	4740	500
TRFJ991F	11.1 / 12.1	630x240x335	10	5290	500

Booster Cable

TRWFI1070A

1/2" IMPACT WRENCH ROCKING DOG

"Square drive: 1/2"
Free speed: 7000 RPM
Max Torque: 312 N-M 230 FT-LB
Bolt Capacity:14 mm 9/16" in
Average air consumption: 5 CFM 141 L/min
Air pressure: 90 PSI 6.3 KG/CM2
Air inlet: 1/4"
Length: 180 mm 7.09 in
Weight: 2.15 kgs 4.73 LB

NEW PRODUCT

TRWF002A

17PCS 1/2" AIR IMPACT WRENCH KIT

1pc-WFI-1070 1/2" air impact wrench
10pcs-1/2" dr. sockets: 9, 10, 11, 13, 14, 17,
19, 22, 24, 27mm
1pc- 1/2"dr. 125mm(5") extension bar
1pc-4mm hex key
1pc-oil pot
1pc-mini oiler
1pc-nipple

TRWFR1060

1/2" & 3/8" DR. AIR RATCHET WRENCH SINGLE RATCHET PAW

Square drive:1/2" or 3/8"
Free speed:150 RPM
Max Torque:61 N-M 45 FT-LB
Average air consumption:5 CFM 141 L/min
Air pressure:90 PSI 6.3 KG/CM2
Air inlet:1/4"
Length:262 mm 10.3 in
Weight: 1.17 kgs 2.57 LB

TRWF007

9PCS 150MM AIR HAMMER KIT

1pc-WFH-1040 150mm air hammer
1pc-spring retainer
1pc-oil pot
4pcs-120mm chisels(Round or Hex optional)
1pc-nipple
1pc-blow mold case

Model	MOQ	QTY/CTN	G.W(CTN/KGS)	N.W (CTN/KGS)	Package Size (mm)	QTY/20'CY (PCS)
TRWFI1070A	200	6	15	14	450x230x260	3198
TRWF002A	200	6	27	25	540x280x310	3559
TRWFR1060	200	20	25	24	385x300x245	19648
TRWF007	200	8	18	17	460x320x290	5210

Booster Cable

TRWFD1050

3/8"REVERSIBLE AIR ANGLE DRILL

Chuck: 3/8"
Free speed: 1800 RPM
Angle: 90°
Average air consumption: 5 CFM 141 L/min
Air pressure:90 PSI 6.3 KG/CM2
Air inlet:1/4"
Length:193 mm 7.6 in
Weight:1.16 kgs 2.55 LB

TRWF006

16PCS 3/8" AIR DRILL KIT

1pc-WFD-1050 3/8" air drill
10pcs-HSS twist drill bits: 1.5, 2, 2.5, 3.5, 4, 4.5, 5, 5.5, 6mm
1pc-oil pot
1pc-min oiler
1pc-drill chuck key
1pc-nipple
1pc-blow mold case

NEW PRODUCT

TRWFG1310

1/4" 6MM AIR DIE GRINDER

Collet: 1/4", 1/8" 6mm, 3mm
Free speed:22000 RPM
Angle: 0°
Average air consumption:
4 CFM 113 L/min
Air pressure:90 PSI 6.3 KG/CM2
Air inlet:1/4"
Length:173 mm 6.81 in
Weight: 0.69 kgs 1.52 LB

TRWF008A

50PCS AIR TOOL COMBO KIT

TRWF005

16PCS AIR DIE GRINDER KIT

1pc-WFG-1310 6mm(1/4") air die grinder
2pcs-hand wrenches
5pcs-3mm(1/8"") mounted grinding stones
5pcs-6mm(1/4") mounted grinding stones
1 pc-3mm(1/8") collet
1pc-nipple
1pc-blow mold case

Model	MOQ	QTY/CTN	G.W(CTN/KGS)	N.W (CTN/KGS)	Package Size (mm)	QTY/20'CY (PCS)
TRWFD1050	200	20	25	23	440x340x270	13765
TRWF006	200	8	14	11	430x245x245	8617
TRWFG1310	200	30	23	21	405x240x300	28601
TRWF005	200	10	11	10	425x245x295	9050
TRWF008A	200	2	9.0	9.5	450x365x240	1410

Air Spray Guns

Equally, as well as being used as car paint sprayers, you can also use these as general purpose air compressor paint sprayers for other tasks you might have. So whether you're looking for gravity fed or suction fed spray guns, we're sure to have the perfect air spray gun amongst our product listings.

TRWF990G1

TRWF990G2

TRWF990S

TRWF4001

TRWF827S

TRWF828G

TRWF6000AG

TRWF601AS

TRWF801AG

Model	Air Consumption(CFM) Cup Size(ML)	Cup Size (ML)	Nozzle Size (MM)		Fluid(Water) Delievery (ML/MIN)	Air Pressure (PSI)	Air Inlet (INCH)	N.W/G.W (kgs) Per CTN	Package Size (mm)	QTY/CTN (PCS)	QTY/20'CY (PCS)
			Standard	Range							
TRWF990G1	3-8	600	1.5	1.2-2.5	160-240	43	1/4"	14/15	570x360x400	20	6800
TRWF990G2	3-8	600	1.5	1.2-2.5	160-240	43	1/4"	15/16	570x360x400	20	6800
TRWF990S	3-8	850	1.5	1.2-2.5	130-210	50	1/4"	9/10	570x350x295	10	4760
TRWF4001	6-10	1000	1.8	1.4-2.5	160-240	50	1/4"	12/14	570x370x330	10	4020
TRWF827S	6-10	1000	1.4	1.2-2.5	130-210	50	1/4"	12/14	760X235X270	10	5800
TRWF828G	5-10	600	1.4	1.2-2.5	100-220	43	1/4"	15/16	680x460x260	20	6900
TRWF6000AG	5-9	600	1.3	1.3-2.5	230-310	29-36	1/4"	10/12	680x340x245	10	4950
TRWF601AS	6-10	1000	1.4	1.4-2.5	130-210	30-43	1/4"	12/14	795X415X240	10	3550
TRWF801AG	6-10	600	1.3	1.3-2.0	150-230	29-36	1/4"	8/9	680X340X240	10	5050

Air Blow Gun

TRWYA60-1

TRWYA60-3

TRWYA60-2

Model	N.W/G.W (kgs) Per Ctn	QTY/CTN(PCS)	Package Size(mm)	QTY/20'CY (PCS)
TRWYA60-1	11/12	40	410x300x240	38000
TRWYA60-2	12/13	40	410x300x320	28000
TRWYA60-3	13/14	40	410x300x320	28000
TRWYDO-10	12/14	20	590x440x420	5100
TRWYDO-15	12/14	20	590x440x420	5100
TRWYDO-9-EC	13/15	20	590x440x480	4400
TRWYPS-1	11/13	10	380x300x350	7000
TRWYPS-3	16/18	20	720x515x240	6200

Air Washing Gun

TRWYDO-15

TRWYDO-9-EC

TRWYDO-10

Air Sandblast Gun

TRWYPS-1

TRWYPS-3

Air Hose Reel

TRI03010Q
TRI03011Q

TRI03012Q
TRI03013Q

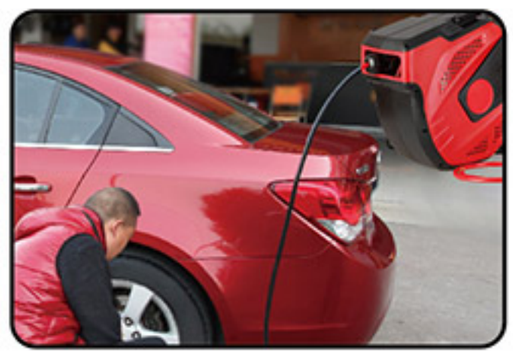

TRI03015Q

TRI03020Q
TRI03021Q

TRI03030Q

Model:	TRI03010Q	TRI03011Q	TRI03012Q	TRI03013Q	TRI03015Q	TRI03020Q	TRI03021Q	TRI03030Q
Hose Length:	10+1M/33FT	14+1M/46FT	10+1M/33FT	20+1M/66FT	15+1.5M/50FT	20+2M/66FT	15+1.5M/50FT	30+2M/100FT
Hose Material:	□PVC □PU	□PVC □PU	□PVC □PU	□PVC □PU	□PVC	□PVC □PU	□PVC	□PVC □PU
Case Material:	PP	PP	PP	PP	PP	PP	PP	PP
Working Pressure:	18 Bar	18 Bar	18 Bar	18 Bar	18 Bar	18 Bar	18 Bar	18 Bar
Fitting:	□1/4"BSPT □1/4"NPT	□1/4"BSPT □1/4"NPT	□1/4"BSPT □1/4"NPT	□1/4"BSPT □1/4"NPT	□1/4"BSPT □1/4"NPT	□1/4"BSPT □1/4"NPT	□1/4"BSPT □1/4"NPT	□1/4"BSPT □1/4"NPT
Hose Size:	5/16"	1/4"	3/8"	5/16"	□3/8"	□3/8"	□1/2"	□3/8"
Gw/nm.	4.38/3.9KGS	4.38/3.9KGS	7.1/6.5KGS	7.1/6.5KGS	7.3/6.7KGS	10.35/9.6KGS	10.35/9.6KGS	13.25/12.4KGS
Packing Size(1pc):	295x165x330 mm	295x165x33 mm	320x200x340 mm	320x200x340 mm	440x225x410 mm	510x270x470 mm	510x270x470 mm	540x290x505 mm
Packing Size(1pc):	605x345x350 mm 4PC/CTN	605x345x350 mm 4PC/CTN	420x335x360 mm 2PC/CTN	420x335x360 mm 2PC/CTN	1PC/CTN	1PC/CTN	1PC/CTN	1PC/CTN
20'QTY:	1428PCS	1428PCS	1372PCS	1372PCS	690PCS	420 PCS	420PCS	360PCS
MOQ:	50PCS	50 PCS	50 PCS	50 PCS	50 PCS	50 PCS	50 PCS	50 PCS

Steel Air Hose Reel

TRI07115
TRI07116

15 M 20M

TRI07117
TRI07118

15 M 20M

Model:	TRI07115	TRI07116	TRI7117	TRI7118
Hose Length:	15+1M/50FT	20+1M/66FT	15+1M/50FT	20+1M/66FT
Hose Material:	□PVC □PU	□PVC □PU	□PVC □PU	□PVC □PU
Case Material:	PP	PP	PP	PP
Working Pressure:	18 Bar	18 Bar	18 Bar	18 Bar
Fitting:	□1/4"BSPT □1/4"NPT	□1/4"BSPT □1/4"NPT	□1/4"BSPT □1/4"NPT	□1/4"BSPT □1/4"NPT
Hose Size:	□3/8"	□3/8"	□3/8"	□3/8"
Gw/nm.	9.5/8.5KGS	13.8/12.8KGS	14.8/13.8KGS	16.6/15.6KGS
Packing Size(1pc):	425x200x475 mm	49.5*21.5*53.8CM	46.5*21*46.5CM	50*21*52.5CM
Packing Size:	1PC/CTN	1PC/CTN	1PC/CTN	1PC/CTN
20'QTY:	606PCS	550PCS	700PCS	554PCS
MOQ:	100 PCS	100 PCS	100 PCS	100 PCS

Air Hose Reel

TRI01015Q

Model:	TRI01015Q
Hose Length:	15 + 1.5M/50FT
Hose Material :	PVC
Case Material:	PP
Working Pressure:	18 bar
Hose Size:	1/2"
Fitting:	1/4"
G.W/n.w:	10/9 kgs
Packing Size:	51x27x45 cm
20'QTY:	440 PCS
QTY/CTN:	1PC
MOQ:	50 PCS

TRI04014Q

Model:	TRI04014Q
Hose Length:	14+1m/46ft
Hose Material :	□pvc □pu
Case Material:	PP
Working Pressure:	10bar
Hose Size:	1/4"
Fitting:	1/4"
G.W/n.w:	4.38/3.9 kgs
Packing Size:	29.5xl6.5x33 cm
20'QTY:	1428 PCS
QTY/CTN:	4PCS
MOQ:	50 PCS

Electric Cable Reel

TRI03315D
TRI03325E

TRI03315E

Model:	TRI03315D	TRI03325E	TRI03315E
Hose Length:	14+1M/46FT	10+1M/30FT	25+1 M/82FT
Hose Material:	口 H05VV-F3G1.5 MM2	口 H07RN-F3x2.5 MM2	口 H05VV-F3G1.5 MM2
Case Material:	PP	PP	PP
Volt:	230 V	230 V	230 V
Power:	1000-3000 W	1500-3500 W	1000-3000 W
Gw/nm.	2.28/5 KGS	5.28/5 KGS	8.5/7.5KGS
Packing Size(1pc):	295x165x33 mm	295x165x330 mm	320x200x340 mm
Packing Size:	605x345x350 mm 4 PC/CTN	605x345x35 mm 4 PC/CTN	420x335x360 mm 2 PC/CTN
20'QTY:	1428 PCS	1428 PCS	1318 PCS
MOQ:	50 PCS	50 PCS	50 PCS

Parts Washer

TRG4001-3.5
3-1/2 Gallon

Model:	TRG4001-3.5
N.W.:	6.5 kgs
G.W.:	7.5 kgs
Package Size:	470x360x250 mm
QTY/20'CY:	700 PCS

Model:	TRG4001-20
N.W.:	23 kgs
G.W.:	26 kgs
Package Size:	790x550x320 mm
QTY/20'CY:	210 PCS

Model:	TRG4001-40
N.W.:	42 kgs
G.W.:	45 kgs
Package Size:	1140x550x330 mm
QTY/20'CY:	145 PCS

TRG4001-20
20 Gallon

TRG4001-40
40 Gallon

Specification:

Suitable for different kind of solvent at same time
Double driving pump for higher cleaning efficiency
Two Separated tank with perfect welding seal
Solvent capacity:24 Gallon
Electrical requirement:110V,60Hz (240V/50Hz)

Parts Washer Trolley

TRG4001-20M
20 Gallon

TRG-PW40G-II
40 Gallon

Model:	TRG-PW40G-II
N.W.:	45 kgs
G.W.:	48 kgs
Package Size:	1140x550x330 mm
QTY/20'CY:	145 PCS

Model:	TRG4001-20M
N.W.:	34 kgs
G.W.:	37 kgs
Package Size:	850x570x500 mm
QTY/20'CY:	108 PCS

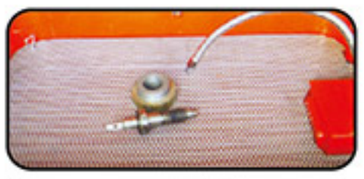

Portable Sandblaster

TRSDB07G
7 GALLON

Model	TRSDB07G	TRDSB07G
Tank Capacity	40 lbs	40 lbs each
Air Consumption	8.5 CFM/90 PSI	8.5 CFM/90 PSI
Working Pressure	35-90 PSI	60-125 PSI
Nozzle Size	2.5 / 3 mm	2 / 2.5 / 3 / 3.5 mm
N.W. / G.W.	13.1kgs / 14 kgs	29 kgs / 31.5 kgs
Package Size	765x265x275 mm	800x550x340 mm
QTY/20'CY	500 PCS	184 PCS

TRSDB07G
Dual blasster for soda and abrasive

TRG4012
10 GALLON
TRG4020B
20 GALLON

Model	TRG4012	TRG4020B
Overall Size	830x480x330 mm	920x780x380 mm
Hose Length	2500 mm	2500 mm
Work Pressure	60-125 PSI	60-125 PSI
N.W.	17 kgs	21 kgs
G.W.	19 kgs	23 kgs
Package Size	770x415x365 mm	880x460x420 mm
QTY/20'CY	233 PCS	160 PCS

NEW PRODUCT

TRGA26
26 GALLON

Model	TRG4A26
Hose Length	16.4 ft (5 m)
Work Pressure	60-125 PSI
N.W.	38.5 kgs
G.W.	40 kgs
Package Size	835x490x575 mm
QTY/20'CY	110 PCS
MOQ	10 PCS

TRSB28
28 GALLON

Model	TRSB28
Wheel Size	6" & 4"
Air Consumption	6-22.5 CFM/115 PSI
Motor Power	1200 W
Air Intel	1/22" - 18Npt
Tank Size	41" (H) x 15" (I.D)
N.W. / G.W.	27 / 30 kgs
Package Size	1020x460x515 mm
QTY/20'CY	110 PCS

Benchtop Sandblast Cabinet

Model	TRG4092
Overall Size	630x530x480 mm
Work Pressure	506x460x280 mm
N.W.	18 kgs
G.W.	20 kgs
Package Size	640x510x520 mm
QTY/20'CY	160 PCS

TRG4092

Side Open

TRGA150 150 L

Model	TRGA150
Overall Size	690x545x615 mm
Work Pressure	635x545x480 mm
N.W.	22 kgs
G.W.	25 kgs
Package Size	725x610x655 mm
QTY/20'CY	81 PCS
MOQ	10 PCS

Model	TRSBC110
Overall Size	690x460x720 mm
Working Space	685x455x420 mm
Sand Loading Capacity	12L
Air Compressor delivery	40-80 PSI
N.W / G.W	26.5 / 30 kgs
Package Size:	760x488x720 mm
QTY/20'CY	99 PCS

TRSBC110 110 L

Vertical Sandblast Cabinet

Model	TRG4222
Overall Size	875x630x1350 mm
Working Space	840x550x580 mm
N.W.	43 kgs
G.W.	47 kgs
Package Size:	950x620x610 mm
QTY/20'CY	63 PCS

TRG4222

Assembly Type

TRGA200

Model	TRGA200
Overall Size	890x565x1368 mm
Working Space	860x563x560 mm
N.W.	38.2 kgs
G.W.	41.25 kgs
Package Size:	910x625x200 mm
QTY/20'CY	220 PCS
MOQ	10 PCS

Vertical Sandblast Cabinet

TRSBC990

- Natural rubber / vinyl blast gloves.
- Perforated steel flooring-abrasive large particle-separating screen and clean-out doc
- Powder coated inside and out.
- Extra-rugged, heavy-duty production foot valve assembly.Built to blast with heavy steel housing and high-production brass flow valve.
- Air regulator / gauge panel.
- 12 gauge steel legs (16 gauge panels).
- Eliminating typical suction pick-up tubes and hoses, media metering valve puts our economy.
- Series blast cabinets in a entirely different class from the competition.
- External flourescent lighting system.

Model	TRSBC990
Working Space	1180x890x825 mm
Working Pressure Range	90-125 PSI
N.W. / G.W.	160 / 190 kgs
Package Size:	1330x960x1070 mm
QTY/20'CY	20 PCS

NEW PRODUCT

TRSBC1200

- Natural rubber / vinyl blast gloves.
- Perforated steel flooring-abrasive large partlcle-separeting screen and clean-out door.
- Powder coated Inside and out.
- Extra-rugged, heavy-duty production foot valve assembly. Built to blast with heavy steel housing and high-production brass flow valve.
- Air regulator / gauge panel.
- 12 gauge steel legs (16 gauge panels).
- Eliminating typical suction pick-up tubes and hoses, media metering valve puts our economy
- Series blast cabinets In a entirely different class from the competition.
- External flourescent lighting system.
- Air requirement: 0.4~0.8 MPA

Model	TRSBC1200
Working Space	1300x1180x825 mm
Working Pressure Range	90-125 PSI
Sand Loading Capacity	32 L
N.W. / G.W.	215 / 254 kgs
Package Size	1430x1350x1080 mm
QTY/20'CY	8 PCS

Plastic Oil Drains

TRGA30
30 L

TRGA35-B
35 L

TRGA75
75 L

Model	Capacity(L)	Basin Capacity(L)	Working Pressure(psi)	Products Size(mm)	N.W/G.W(kgs)	Package Size(mm)	QTY/20'CY
TRGA30	30L	10L	1-3Bar	400x400x1500	4.5/6	460x440x550	240
TRGA35-B	35L	10L	1-3Bar	350x350x1500	5/6	460x440x550	240
TRGA75	75L	10L	1-3Bar	450x450x1700	8/9	480x450x770	160

Oil Drains

TRG2018
70 L

TRG2020
70 L

TRG2094
100 L

Model	Capacity	Basin Capacity(L)	Working Pressure(psi)	Max Pressure(psi)	Products Size(mm)	N.W/G.W(kgs)	Package Size(mm)	QTY/20'CY
TTRG2018	318Gallon/70L	10L	8-10Bar	3Bar	480x350x1600	16/18	520x440x910	140
TRG2020	18Gallon/70L	10L	8-10Bar	3Bar	480x350x1600	16/18	520x440x910	140
TRG2094	28Gallon/105L	10L	8-10Bar	3Bar	500x500x1800	21/24	510x510x1120	90

Pneumatic Oil Drains

TRG6194
70 L

TRG6197
70 L

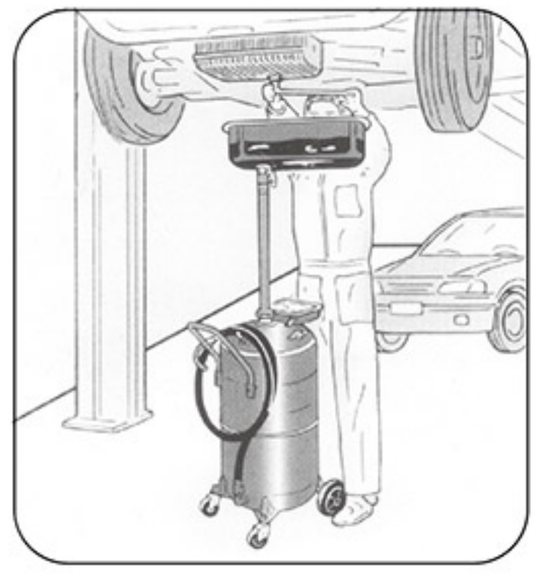

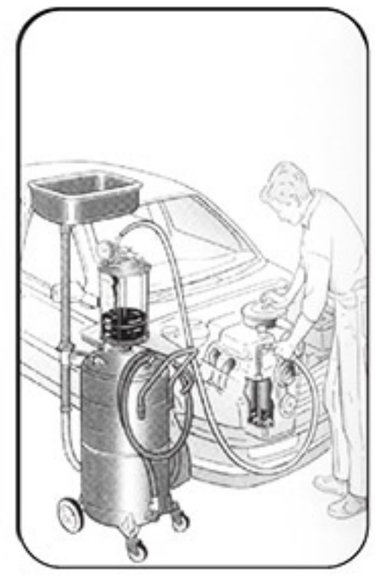

TRG2093
90 L

TRG2091
90 L

TRG2092
90 L

TRG2090
90 L

Model	Capacity (L)	Basin Capacity (L)	Working Pressure (psi)	Max Pressure (psi)	Metal Suction Pipe Size	Products Size (mm)	N.W/G.W (kgs)	Package Size (mm)	QTY/20'CY
TRG6194	18Gallon/70L	10L	8-10Bar	10Bar	Steel 8 x 750 length	490x430x1600	19 / 21	520x440x910	140
TRG6197	18Gallon/70L	10L	8-10Bar	10Bar	Steel 6 x 750 Length	490x430x1600	1#24/26 2#5/6	1#520x440x910 2#280x280x520	12
TRG2092	23Gallon/90L	15L	8-10Bar	10Bar	Nylon 8 x 950 length	500x500x1600	1#24/27 2#5/6	1#510x510x1040 2#280x280x520	100
TRG2091	23Gallon/90L	15L	8-10Bar	10Bar	Nylon 6 x 950 length	500x500x1600	22 / 25	510x510x1040	85
TRG2090	23Gallon/90L	15L	8-10Bar	10Bar	Nylon 5 x 950 length	500x500x1600	1#25/28 2#5/6	1#510x510x1040 2#280x280x520	85
TRG2093	23Gallon/90L	15L	8-10Bar	10Bar	-	500x500x1600	23 / 26	510x510x1040	100

Grase Injector

12L Manual GRASE INJECTOR
"Grease output:0.005 kg / one stroke
outlet Pressure:200-250 BAR, 2900-3625 PSI
Barrel Capacity:12 L"

TRH12M-A

12 L

25L ManualGREASE INJECTOR
"Grease output:0.005 kg / one stroke
Outlet Pressure:200-250 BAR 2900-3625PSI
Barrel capacity:25 L"

TRH25M

25 L

Model	Min.Qty (Sets)	Body Treatment	Packing	Qty/CTN (PC)	Meas(mm)	G.W./N.W (Kgs)	Qty/20'FT (PCS)
TRH12M-A	100	Power Coating	Brown Carton	1	370x280x550	7.0 / 6.0	490
TRH25M	100	Power Coating	Brown Carton	1	410x410x720	9.0 / 8.0	367

Air Tire Inflating Gun

TRG-1A

AIR TIRE INFLATING GUN
"Recommended working pressure:0-8bar
WORKING PRESSURE:0-12BAR
PRESSURE GAUGE RANGE:0-12BAR
Length of rubber hose: 44 cm"

TRG-1B

AIR DIGITAL TIRE INFLATING GUN
"Recommended working pressure:0-4bar
working pressure:0-12bar
air inlet:1/4""
Length of rubber hose: 44 cm"

TRG18A

AIR TIRE INFLATING GUN
"Recommended working pressure:0-4 bar
working pressure:0-12 bar
air inlet:1/4""
Length of rubber hose: 44 cm"

TRG18D

Model	Min.Qty (Sets)	Body Treatment	Packing	Qty/CTN (PC)	Meas(mm)	G.W./N.W (Kgs)	Qty/20'FT (PCS)
TRG-1A	1000	Power Coating	Slide Blister Card	40	680x380x330	18.0 / 16.0	13130
TRG-1B	1000	Power Coating	Slide Blister Card	40	680x380x330	18.0 / 16.0	13130
TRG18A	500	PA 6 body	Double Blister	20	415X380X370	14.0 / 12.0	9560
TRG18D	500	PA 6 body	Double Blister	20	415X380X370	14.0 / 12.0	9560

High Pressure Grease Injector

12L HIGH PRESSURE GREASE INJECTOR
Air Hose: 4 m x 6 mm x16 mm high pressure【6000PSI】;
Barrel size:324xΦ222mm
with regulator;
with 2 wheels, lid- installed handle;
Compression Ratio:50:1;
Air Pressure (Mpa):0.6～0.8;
Grease Delivery(L/Min):0.85;
Outlet Pressure (Mpa):30～40;"

TRH12
12 L

20L HIGH PRESSURE GREASE INJECTOR
Air Hose: 4 m x 6 mm x16 mm high pressure【6000PSI】;
Barrel size:350xΦ286 mm
with regulator;
with 4 wheels, lid- installed handle;
Compression Ratio:50:1;
Air Pressure (Mpa):0.6～0.8;
Grease Delivery(L/Min):0.85;
Outlet Pressure (Mpa):30～40;"

TRH20
20 L

30L HIGH PRESSURE GREASE INJECTOR
Air Hose: 4 m x 6 mm x16 mm high pressure【6000PSI】;
Barrel size:430xΦ315mm
with regulator;
with4 wheels, lid- installed handle;
Compression Ratio:50:1;
Air Pressure (Mpa):0.6～0.8;
Grease Delivery(L/Min):0.85;
Outlet Pressure (Mpa):30～40;"

TRH30
30 L

45L HIGH PRESSURE GREASE INJECTOR
Air Hose: 4 m x 6 mm x16 mm high pressure【6000PSI】;
Barrel size:430xΦ355 mm
with regulator;with 4 wheels, lid- installed handle;
Compression Ratio:50:1; Air Pressure (Mpa):0.6～0.8;
Grease Delivery(L/Min):0.85; Outlet Pressure (Mpa):30～40;"

TRH45
45L

12L Manual GRASE INJECTOR
"Grease output:0.005kg/one stroke
outlet Pressure:200-250BAR, 2900-3625PSI
Barrel Capacity:12L"

TRH12F
12 L

Model	Body Treatment	Packing	Meas(mm)	G.W./N.W (Kgs)	Qty/CTN (PC)	Qty/20'FT (PCS)	MOQ (PCS)
TRH12	Power Coating	Brown Carton	320x360x840	14.0 / 13.5	1	289	100
TRH20	Power Coating	Brown Carton	360x340x760	14.0 / 13.0	1	300	100
TRH30	Power Coating	Brown Carton	365x365x840	16.0 / 15.0	1	250	100
TRH45	Power Coating	Brown Carton	400x400x840	17.5 / 16.5	1	208	100
TRH12F	Power Coating	Brown Carton	400x360x530	11.0 / 12.0	1	368	100

Manually Grease Gun

TRSX467

•"Shift" switch to increase volume or pressure.
•Bulid-up with smart air vent value for easy to release air pocket.
•Aluminum housing withstand tough environments.

TRSX488N

Smart grease gun ,its ideal for extending gun handle to allow one-hand operation grease gun to able worked in two-hand operation.By this way,the user could have more options to do its work in properway. One-hand operation gun is convenience for narrow space.Two-hand operation grease is for user easy to get a high pressure performance.This smart "FUCTION"gun offers a comfortable handle that lets you use one or two hands for greasing.

Dual Piston with high volume performance

TRSX479N

TRSX460

TRSX478

Feature in two-direction-outlet designed for requirement of work site,for suitable selesction to carry out the work conveniently.

Mini

TRSX220

Model	Working Pressure Max(psi)	Burst Pressure(psi)	De livers Mins (oz/Strokes)	Load ing Way (c.c.)	Capacity(c.c.)	N.W / G.W (kgs) Per CTN	Package Size(mm)	QTY/CTN (PCS)	QTY/20'CY (PCS)
TRSX467	1000	2000	0.5 / 40	400	400	22.4 / 23.22	429x392x330	10	5400
TRSX488N	3600	8000	0.8oz / 40	400	400	23.4 / 24.4	470x416x331	12	6000
TRSX479	3600	6000	3oz / 40	400	400	23.98 / 26.97	585x415x295	16	6500
TRSX460	4500	10000	1oz / 40	400	400	21.92 / 25.02	486x382x322	20	10000
TRSX478	3600	6000	3oz / 40	400	400	23.98 / 26.97	585X415X292	16	6500
TRSX220	2900	4000	0.5oz / 40	120	120	16.17 / 19.67	543x245x400	30	15000

Air Grease Gun

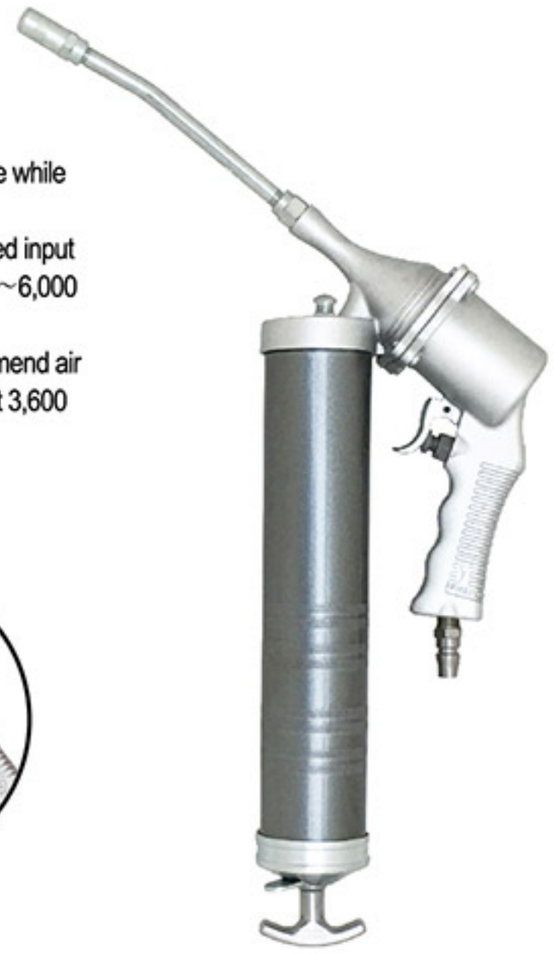

•Continuously pumps grease while trigger is depressed.
•Pressure Range: Air supplied input 60 ~150 psi / output 2,400 ~6,000 psi.
•Working Pressure: Recommend air supplied input 90 psi / output 3,600 psi.

TRSX500CS

TRSX570C

1.K-500CS Air Grease Gun x1
2.Manual Operated Gun Head Assembly x 1
3.Metallic Bend Spout x 1
4.1/4" Quick Release Coupler x 1
5.1/4" Hose Fitting x 1
6.Grease Coupler x 1/
7.Grease Fitting x 10
8.Press-on 90 Degree x 1
9.Straight Extension x 1
10.12" Hose Extension x 1
11.Slid-on 90 Degree Coupler x 1
12.Rubber Tipped Nozzle x 1
13.Needle Nozzle x 1
14.360 Degree Coupler x1

Hand Transfer Pumps

Grease Gun Filler Pump

TRSX493

•Includes filler adapter (0.596J?ID) for bulk loading grease guns. Equipped with follower plate, pail cover and filler adapter cap to prevent grease contamination.
• With rubber pail cover
•Fits 35-50 lb. / 5 gallon plastic pail.

Lever operated Barrel Pump

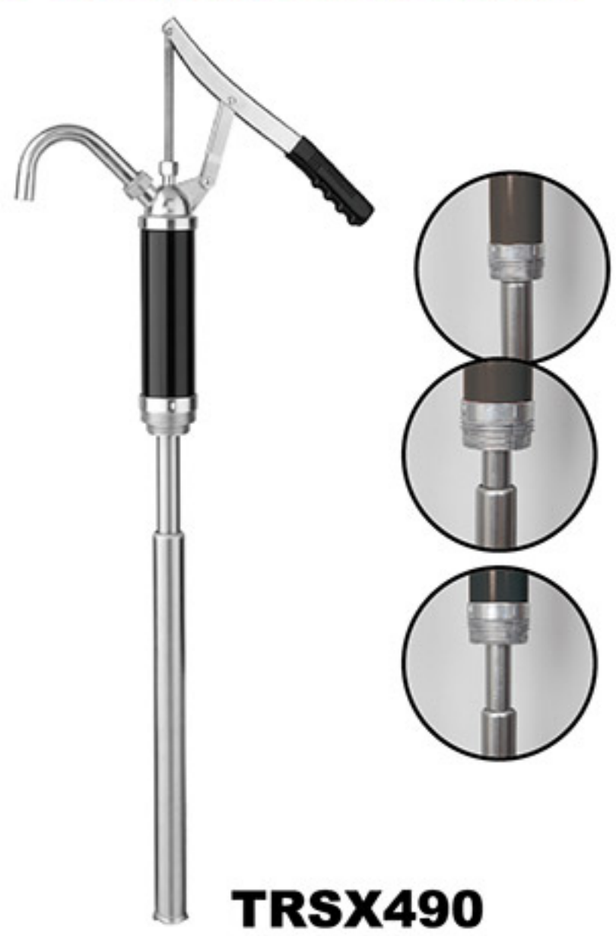

TRSX490

• Two—piece telescoping suction tube fits 15 to 55 gallon drums. Dispenses approximately 250c.c. per stroke. Complete with standard bung adapter, tough all-steel foot valve and piston valve.
•With standard garden hose thread discharge spout.

Rotary Barrel pump

TRSX499

Model	Working Pressure Max(psi)	Burst Pressure(psi)	Load ing Way (c.c.)	Capacity(c.c.)	N.W / G.W (kgs) Per CTN	Package Size(mm)	QTY/CTN (PCS)	QTY/20'CY (PCS)
TRSX500CS	90	3600	400	400	13.86 / 16.27	393X365X355	10	6000
TRSX570C	90	3600	400	400	15.24 / 21.73	420X418X295	5	2800
TRSX493	/	/	/	/	11.96 / 13.95	435x415x400	4	1500
TRSX490	/	/	/	/	19.43 / 21.83	480X363X300	10	5600
TRSX499	/	/	/	/	11.1 /1 2.87	1035X290X210	2	950

Foam Machine

TRG25LS
25 L

TRG25L2.0
25 L

NEW PRODUCT

TRG50L2.0
50 L

TRG5061
25 L

Staniless

Model	Description	Capacity (L)	Working Pressure (psi)	Max Pressure (psi)	Products Size (mm)	N.W/G.W (kgs)	Package Size (mm)	QTY/20'CY
TRG25L2.0	25L multifunctional foam machine	6Gallon/25L	3Bar	8Bar	300x280x780	12/13	370x360x810	260
TRG25LS	25L foam machine	6Gallon/25L	3Bar	8Bar	300x280x780	12/13	370x360x810	260
TRG50L2.0	50L multifunctional foam machine	13Gallon/50L	3Bar	8Bar	380x360x800	17/19	440x420x810	200
TRG5061	25L Stainless multifunctional foam machine	6Gallon/25L	3Bar	8Bar	300x280x780	10/11	370x360x810	260

Dry / Wet Vacuum Cleaner

TRF20-G

TRF30-G

TRF30-DG

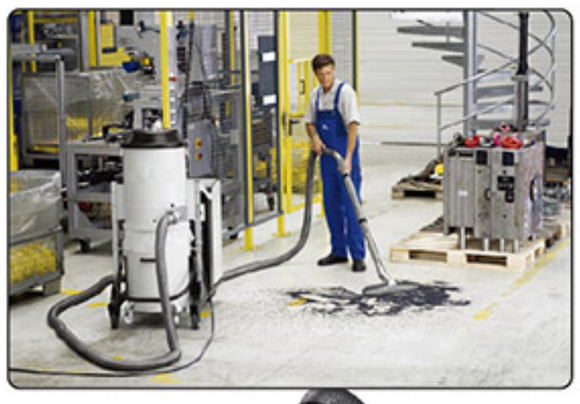

TRF30-HG

TRF70-2P

TRF70-3P

Model	TRF20-G	TRF30-G	TRF30-DG	TRF30-HG	TRF70-2P	TRF70-3P
Tank Capacity	20 L	30 L	30 L	30 L	70 L	70 L
Rated Power(W)	1400 W	1400 W	1400 W	1400 W	2000 W	3000 W
Rated Voltage(V)	220-240 V	220-240 V	220-240 V	220-240 V	220-240 V	220-240 V
Nomal Frequency(Hz)	50 Hz / 60 Hz	50 Hz / 60 Hz	50 Hz / 60 Hz	50 Hz / 60 Hz	50 Hz / 60 Hz	50 Hz / 60 Hz
Vacuum suction(KPA)	>19 KPA	>19 KPA	>19 KPA	>19 KPA	>19 KPA	>19 KPA
Air flow	46 L / S	46 L / S	46 L / S	46 L / S	106 L / S	120 L / S
Accessory diametet(mm)	40 mm	40 mm	40 mm	40 mm	40 mm	40 mm
Length of cable(m)	5 m	5 m	5 m	5 m	5 m	5 m
Package	1 unit / carton	1 unit / carton	1 unit / carton	1 unit / carton	1 unit / carton	1 unit / carton
Conton dimension(cm)	40X45X58 cm	40X45X72 cm	40X45X72 cm	51X46X81 cm	63X59X100 cm	63X59X100 cm
NW/GW	10 / 11 kgs	11 / 12 kgs	11 / 12 kgs	11.5/13 kgs	24 / 28 kgs	26 / 31 kgs
Conveyance 40HQ	525 PCS	450 PCS	450 PCS	366 PCS	175 PCS	175 PCS
Moq:	50 PCS	50 PCS	50 PCS	50 PCS	20 PCS	20 PCS

Hot Air Gun

TRGW1025

TRGW1026
TRGW1026A

- Adjustable Temperature
- LCD Display

- Removing Adhesive Labels, Thawing Pipes, Gutters, Freezers, or Radiators, Loosening Rusted Nuts and Bolts

TRGW1027
TRGW1027A

TRGW1028
TRGW1028A

Model	Voltage& Frequency	Rate Powerl	Temperature	Air Flow	N.W. / G.W.(kgs)	Package Size (mm)	QTY/CTN (PCS)	QTY/20'CY (PCS)
TRGW1025	120V-60HZ	750/1500W	300/500˚C	280/480 L/min	7/8.8	265x91x250	10	4040
TRGW1026	230V/240V-50HZ	1000/2000W	350/550˚C	300/500 L/min	9/10	265x91x250	10	4040
TRGW1026A	120V-50HZ	750/1500W	300/500˚C	280/480 L/min	9/10	265x91x250	10	4040
TRGW1027	230V/240V-50HZ	2000W(Max)	50/50-550/50-550˚C	350/350/500 L/min	9/10	265x91x250	10	4040
TRGW1027A	100V/120V-60HZ	1500W(Max)	40/40-350/40-500˚C	280/280/480 L/min	9/10	265x91x250	10	4040
TRGW1028	230V/240V-50HZ	2000W(Max)	50/70-600/70-600˚C	300/300/500 L/min	9/10	265x91x250	10	4040
TRGW1028A	120V-60HZ	1500W(Max)	50/70-550/70-550˚C	280/280/480 L/min	9/10	265x91x250	10	4040

Car Polisher

- Car waxing machine is mainly used for surface treatment of washing, beauty, wax and other high-grade products such as automobiles, aircraft, furniture and furniture.

TRGW2006 TRGW2006A

TRGW2001

TRGW2002

Model	Voltage& Frequency	NO LOAD speed	Pad Size	N.W. / G.W.(kg)	Package Size(mm)	QTY/CTN(PCS)	QTY/20'CY(PCS)
TRGW2001	120V-60HZ	3500rpm	240mm/10"	2.0/2.2	260x245x220	6	1760
TRGW2002	230V-50HZ	3500rpm	240mm/10"	2.0/2.2	265x245x225	6	1760
TRGW2006	230V-50HZ	1800-3200rpm	240mm/10"	2.1/2.45	261x245x250	6	1576
TRGW2006A	120V-60HZ	1800-3200rpm	240mm/10"	2.1/2.45	261x245x250	6	1576

High Pressure Washer

TÜV GS CE UL EMC RoHS

- Designed for home and semi-professional use, the Series are lightweight and compact pressure washer that's ideal for many outdoor cleaning jobs such as patios, garden furniture, bins, bikes and..

TRY1.1.0

TRY1.2.0

TRY2.1.0

TRY2.2.0

TRY3.1.0

TRY3.2.0

Model	Power	Rated Pressure	Max.Pressuer	Fiow	Voitage	N.W. / G.W. (kg)	Package Size (mm)	QTY 40HQ (PCS)	MOQ (PCS)
TRY1.1.0S	1500W	80bar	120bar	5.0L/min	220/11V(50-60HZ)	5.6/6.6	260x250x490	2090	300
TRY1.1.0P	1650W	90bar	135bar	5.0L/min	220/11V(50-60HZ)	5.7/6.7	260x250x490	2090	301
TRY1.2.0S	1500W	80bar	120bar	5.0L/min	220/11V(50-60HZ)	5.8/6.8	290x250x475	2000	302
TRY1.2.0P	1650W	90bar	135bar	5.0L/min	220/11V(50-60HZ)	5.9/6.9	290x250x475	2000	303
TRY2.1.0S	1500W	80bar	120bar	5.0L/min	220/11V(50-60HZ)	6.1/7.1	290x250x490	2000	304
TRY2.1.0P	1650W	90bar	135bar	5.0L/min	220/11V(50-60HZ)	6.2/7.2	290x250x490	2000	305
TRY2.2.0S	1500W	80bar	120bar	5.0L/min	220/11V(50-60HZ)	6.6/7.6	290x250x660	1400	306
TRY2.2.0P	1650W	90bar	135bar	5.0L/min	220/11V(50-60HZ)	6.7/7.7	290x250x660	1400	307
TRY3.1.0S	2000W	100bar	150bar	6.0L/min	220/11V(50-60HZ)	8.2/9.2	350x320x510	1200	308
TRY3.2.0S	2000W	100bar	150bar	6.0L/min	220/11V(50-60HZ)	9.4/10.4	350x320x705	800	309

Polisher

TRW2-180

TRW3-150

Model	Rated Voltage (v)	Rated Input Power (w)	No Load Speed (rpm)	G.W (kgs)	N.W (kgs)	Unit Size (mm)	Package Size (mm)	Container (20"/40"/40"HQ) (pcs)	MOQ (pcs)	QTY/CTN (pcs)
TRW2-180	230-240	1200	600-3400	15.8	15.2	450x125x260	530x465x280	1600/3360/3920	500	4
TRW3-150	230-240	900	0-6000	15.8	15.2	450x125x260	530x465x280	1600/3360/3920	500	4

Impact Wrench

Model	TRW-1000
Rated Voltage(v)	230-240
Rated Input Power(w)	1010
No Load Speed(rpm)	2200
Max Torque(nm)	450
Size of Spindle(")	1/2
G.W(kgs)	22
N.W(kgs)	21
Package Size(mm)	480x390x315
Container(20"/40"/40"HQ)(pcs)	1936/3932/4608
MOQ(pcs)	500
QTY/CTN(pcs)	4

TRW-1000

Model	TRW-550
Rated Voltage(v)	230-240
Rated Input Power(w)	520
No Load Speed(rpm)	3200
Forward(nm)	100
Reverse(nm)	320
Size of Spindle(")	1/2
G.W(kgs)	16.5
N.W(kgs)	16
Package Size(mm)	440x365x290
Container(20"/40"/40"HQ)(pcs)	2350/4950/5800
MOQ(pcs)	500
QTY/CTN(pcs)	4

TRW-550

LED Work Light

Material: Rubberized ABS
Lumens: 250LM
4hrs
Over-charging & Discharging Protector
Li-Ion
4hrs
Household Charger & 12V Car Charger
USB cable

N.W./G.W.:5.5/6.5 kgs
Package Size:41x33.5x21 cm
QTY/CTN:10 PCS
QTY/20'CY:9680 PCS

TRZZ-836COB

TRZZ-836SMD

TRZZ-836LED

Material: ABS
Lumens: 250LM
3-4hrs
Li-Ion
3hrs
5V-USB

N.W./G.W.:7.5/8.5 kgs
Package Size:47x27x47 cm
QTY/CTN:12 PCS
QTY/20'CY:5628 PCS

TRZZ-8109SMD

Material: ABS
Lumens: 150LM
1.5hrs
Li-Ion
3hrs
5V-USB

N.W./G.W.:3/3.5 kgs
Package Size:43x25x20 cm
QTY/CTN:20 PCS
QTY/20'CY:26000 PCS

TRZZ-8106

Material: ABS
Lumens: 280LM
3-4hrs
Li-Ion
3hrs
5V-USB

N.W./G.W.:5.5/6 kgs
Package Size:44x35x40 cm
QTY/CTN:10 PCS
QTY/20'CY:4540 PCS

TRZZ-8838A

Material: ABS
Lumens: 280LM
3-4hrs
Li-Ion
3hrs
5V-USB

N.W./G.W.:5/5.5 kgs
Package Size:31x30x36 cm
QTY/CTN:10 PCS
QTY/20'CY:8230 PCS

TRZZ-8836

LED Work Light

TRZZ-812SMD

- 36SMD
- 1000LM (Lumens)
- 4-6hrs
- Over-charging & Discharging Protector
- 36SMD:3hrs 18SMD:6hrs
- Household Charger & 12V Car Charger
- Li-Ion

N.W./G.W.:14/15 kgs
Package Size:127x25x39 cm
QTY/CTN:4 PCS
QTY/20'CY:952 PCS

TRZZ-807A

TRZZ-807COB

- 60LED
- 80LM (Lumens)
- 3-4hrs
- Over-charging & Discharging Protector
- 4hrs
- Household Charger & 12V Car Charger
- Li-Ion

N.W./G.W.:5/6 kgs
Package Size:59x48x34 cm
QTY/CTN:20 PCS
QTY/20'CY:5820 PCS

- Material: ABS+PP
- 250LM (Lumens)
- 3WCOB
- 4hrs
- Li-Ion
- 3hrs

N.W./G.W.:5/6 kgs
Package Size:43x26x34 cm
QTY/CTN:10 PCS
QTY/20'CY:7360 PCS

TRZZ-8807

- 3WCOB
- 300LM (Lumens)
- 4-6hrs
- Over-charging & Discharging Protector
- 3-6hrs
- USB
- Household Charger & 12V Car Charger
- Li-Ion

N.W./G.W.:3.5/4 kgs
Package Size:40x20x20 cm
QTY/CTN:20 PCS
QTY/20'CY:17500 PCS

TRZZ-8831

- 10W
- 600LM (Lumens)
- IP54
- SOS
- 3hrs
- Over-charging & Discharging Protector
- Li-Ion
- 3-6hrs
- USB cable
- Household Charger & 12V Car Charger

TRZZ-510

N.W./G.W.:5/6 kgs
Package Size:42x26x50 mm
QTY/CTN:10 PCS
QTY/20'CY:5120 PCS

Car Creeper

TR6453 36”

TR6451 36”

TR6454A 36”
Foldable

TR6455 40”

Adjust
35°

TR6452 40”

NEW PRODUCT

TR6505 40”

Model	TR6453	TR6451	TR6454A	TR6503	TR6452	TR6455	TR6505
N.W.:	5.76kgs	6.14kgs	6.14kgs	7.4kgs	7.2kgs	6.8kgs	8.5kgs
G.W.:	6.58kgs	6.94kgs	6.94kgs	8.4kgs	8.35kgs	7.7kgs	10kgs
Overall Size:	920x425x95mm	920x425x95mm	920x425x95mm	1025x420x125mm	1025x425x110mm	1025x425x105mm	920x430x140mm
Package Size:	935x450x110mm	935x450x100mm	935x450x100mm	1040x440x90mm	1050x440x130mm	1060x450x120mm	950x450x100mm
QTY/20’CY:	640PCS	630PCS	630PCS	780PCS	459PCS	490PCS	816PCS

Plastic Car Creeper

TRH6803 36"

TRH6803B 36"

TRH6802-2 40"

250 lbs.

TRH6802-2H 40"

350 lbs.

NEW PRODUCT

TRH6806 38"

TRH6808B 40"

Model	TRH6803	TRH6803B	TRH6806	TRH6802-2	TRH6802-2H	TRH6808B
N.W.:	3.45 kgs	3.83 kgs	3.5 kgs	5 kgs	8 kgs	4.4 kgs
G.W.:	4.25 kgs	4.63 kgs	4.5 kgs	6 kgs	9 kgs	5.3 kgs
Overall Size	900x400x100 mm	900x400x100 mm	1000x490x60 mm	1010x475x130 mm	1010x475x130 mm	1010x480x100 mm
Package Size:	930x420x80 mm	930x420x80 mm	1010x500x70 mm	1050x490x95 mm	1050x490x95 mm	1020x494x70 mm
QTY/20'CY:	928 PCS	928 PCS	1136 PCS	580 PCS	580 PCS	580 PCS
MOQ:	/	/	300 PCS	/	/	300 PCS

Bar Stool

SWIVEL 360°

Pneumatic

TR6188C

U.S. Patent No.: USD579,677S

TR6185-1

Model	TR6188C	TR6185-1
Overall Size:	483x483x685 mm	515x515x730 mm
Tube Dia.:	Ø 32	Ø 25
Adjust Height:	115 mm	/
N.W.:	6.9 kgs	5.0 kgs
G.W.:	8.4 kgs	5.76 kgs
Package Size:	420x420x440 mm	680x510x90 mm
QTY/20' CY:	320 PCS	825 PCS

Heavy Duty Creeper Seat

- *Heacy Duty Polished Chrome Frame.*
- *High Density Foam Seat.*
- *Ball Bearing Swivel Casters.*
- *Easy Access Storage Tray.*

U.S. Patent No.: USD579,679S

TR6208

Pneumatic

TR6340

Extra Heavy Duty Steel Tube

Detachable Cup holder

Oversized Swivel Casters

Creeper Seat

Model	TR6208	TR6340	TR6100	TR6201A
N.W.:	8.0kgs	9.56kgs	4.18kgs	5.6kgs
G.W.:	8.62kgs	10.30kgs	4.7kgs	6.3kgs
Overall Size:	445x445x450mm	400x450x400mm	364x365x365mm	Φ380x430mm
Package Size:	460x175x460mm	450x265x270mm	380x145x395mm	405x185x405mm
QTY/20'CY:	800PCS	840PCS	1374PCS	840PCS

TR6100

Creeper Seat

PD2016A

Model	TR6201A	PD2016A	PD2018C
N.W.:	6.5 kgs	8.8kgs	9.1kgs
G.W.:	6.3 kgs	10kgs	10kgs
Overall Size:	380x380x430mm	430x340x439mm	520x359x432mm
Package Size:	405x405x185mm	463x340x440mm	475x285x395mm
QTY/20'CY:	840 PCS	480PCS	588PCS

TR6201A

PD2018C

Creeper Seat

TR6201

TR6201CX

TR6201J

TR6360B

Model	TR6201	TR6201CX	TR6201J	TR6360B
N.W.:	5.6 kgs	5.55 kgs	6.16 kgs	5.1 kgs
G.W.:	6.1 kgs	6.25 kgs	6.82 kgs	5.84 kgs
Overall Size:	380x380x440 mm	380x380x425 mm	380x380x440 mm	435x380x400 mm
Package Size:	410x405x170mm	405x405x180mm	405x405x180 mm	460x390x200 mm
QTY/20'CY:	1120 PCS	840 PCS	840 PCS	748 PCS

Creeper Seat

Pneumatic

TRHL6201J

Pneumatic

TRHL6201

TRHL6201CX

Pneumatic

2.5" PP Caster

Model	TRHL6201J	TRHL6201	TRHL6201CX
N.W (kgs)	5.8	5.3	5.5
G.W (kgs)	6.5	5.86	6.1
Overall Size (mm)	380x380x520 mm	380x380x520 mm	380x380x520 mm
Package Size (mm)	400x400x120 mm	400x400x120 mm	400x400x120 mm
Qty/20'CY	1200 PCS	1200 PCS	1200 PCS

Tie Down / Tow Strap

TRXS14108 TRXS11100 TRXS11201 TRXS12305

package

Model	TRXS14108	TRXS11100	TRXS12201	TRXS12305	TRXS11100L	TRXS11202S	TRXS12201H	TRXS13302H
Description	25mm x 1.8m Cambuckle Tie Down	25mm x 3m Ratchet Tie Down	25mm x 3.6m Ratchet Tie Down	25mm x 4.2m Ratchet Tie Down	1"(25mm) x10'(3.0m) Ratchet Tie Down	1"(25mm) x15'(4.5m) Ratchet Tie Down	1-1/16"(27mm) x15'(3.6m) Ratchet Tie Down	1-1/2"(38mm) x14'(4.27m) Nylon Painting Ratchet Tie Down
Safe Work Load	136kgs	250kgs	400kgs	500kgs	300lbs(136kgs)	500lbs(136kgs)	1000lbs(454kgs)	1667lbs(756kgs)
Break Strength	272kgs	500kgs	800kgs	1000kgs	900lbs(408kgs)	1500lbs(408kgs)	3000lbs(1363kgs)	5000lbs(2267kgs)
Qty/Pack	4	4	4	4	4	4	4	2
N.W/G.W	0.95/1kg	1.45/1.6kgs	3.1/3.3kgs	2.8/3kgs	1.45/1.6kgs	2/2.15kgs	3.1/3.3kgs	2.2/2.4kgs
Package Size	225x210x46mm	300x220x460mm	350x220x58mm	350x220x58mm	300x220x460mm	300x220x46mm	350x220x58mm	290x220x63mm
Qty/20"	7374PCS	6168PCS	4866PCS	4866PCS	6168PCS	6168PCS	4866PCS	5376PCS
MOQ	500PCS	500PCS	500PCS	500PCS	500PCS	500PCS	500PCS	500PCS

TRXS11100L TRXS11202S TRXS11201H TRXS13302H

package

TRXS20301S TRXS20119S TRXS20106S

Model	TRXS20301S	TRXS20119S	TRXS20106S
Description	2"(50mm)x20'(6m) ATV Tow Strap with loop and hook end	2"(50mm)x20'(6m) Tow strap with hooks end	2"(50mm)x20'(6m) Tow strap with loops end
Safe Work Load	666lbs(303kgs)	3000lbs(1363kgs)	5667lbs(2570kgs)
Break Strength	2000lbs(909kgs)	9000lbs(4090kgs)	17000lbs(7711kgs)
Qty/Pack	1	1	1
N.W/G.W	0.6/0.65kgs	1.4/1.5kgs	1.4/1.5kgs
Package Size	70x63x220mm	190x50x220mm	210x50x220mm
Qty/20"	22044PCS	10704PCS	9774PCS
MOQ	500PCS	500PCS	500PCS

Cable Puller

Multi-purpose tool: lifting, lowering, pulling, stretching.
Use anywhere: farming, gardening, machine shop, camping, boating, traveling, hobby shop, trucking, fencing, hunting, sports.

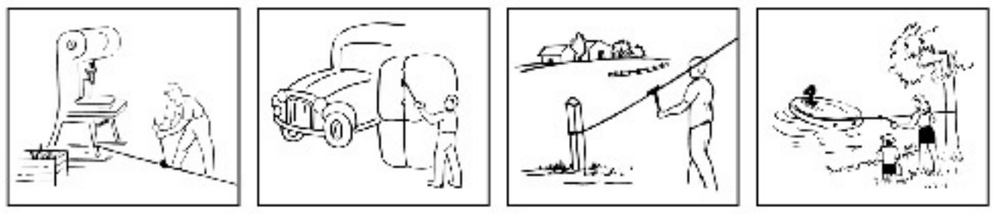

TRK8020
2 Ton

TRK8021CR
2 Ton

TRK8041CR
4 Ton

TRK8021
2 Ton

TRK8041
4 Ton

TRK8021L
2 Ton

TRK8041L
4 Ton

Model	TRK8020	TR8021CR	TRK8041CR	TRK8021	TRK8041	TRK8021L	TRK8041L
Tractor Capacity:	2 Ton	2 Ton	4 Ton	2 Ton	4 Ton	2 Ton	4 Ton
Steel Cable Diameter:	Ø 4.8 mm	Ø 4.8 mm	Ø 5.5 mm	Ø 4.8 mm	Ø 4 mm	Ø 4.8 mm	Ø 5.5 mm
Steel Cable Length:	2.8 m	2.8 m	3 m	2.8 m	3 m	3 m	3.3 m
Package Size (mm):	605x315x180	590x260x220	710x210x290	605x315x180	710x280x210	645x305x250	755x250x165
N.W./G.W. (kgs):	2.3 / 2.7	2.6 / 2.9	5.35 / 5.95	2.9 / 3.05	5 / 5.5	3.2 / 3.5	5.75 / 6.75
QTY/CTN:	6 PCS	6 PCS	4 PCS	6 PCS	4 PCS	6 PCS	2 PCS
QTY/20' CY :	5160 PCS	5040 PCS	2560 PCS	5160 PCS	2560 PCS	3360 PCS	1400 PCS

Wire Rope Pulling Hoist

TRT0800 800 kgs
TRT1600 1600 kgs
TRT3200 3200 kgs
TRT5400 5400 kgs

Model	TRT0800	TRT1600	TRT3200	TRT5400
Rated forward handpower(N)	341	400	438	850
Rated capacity(kgs)	800	1600	3200	5400
Rope diameter (mm)	8.3	11	16	20
Rope size (m)	20	20	20	20
Max travelling load (kgs)	1200	2400	4000	8100
N.W. (kgs)	6.4	12	23	58
G.W. (kgs)	15.3	27	50.8	100
Max outer size (LxHxD mm)	426x238x64	545x284x97	660x325x116	930x390x150
Package size (mm)	960x760x790	1040x770x640	1060x770x610	1100x1100x720
QTY/CTN (PCS)	20	10	5	4
QTY/20'CY (PCS)	960	504	252	120

Electric Winch

TRH92000
2000 LBS

TRH92500
2500 LBS

TRH96000-1
6000 LBS

TRH98000
8000 LBS

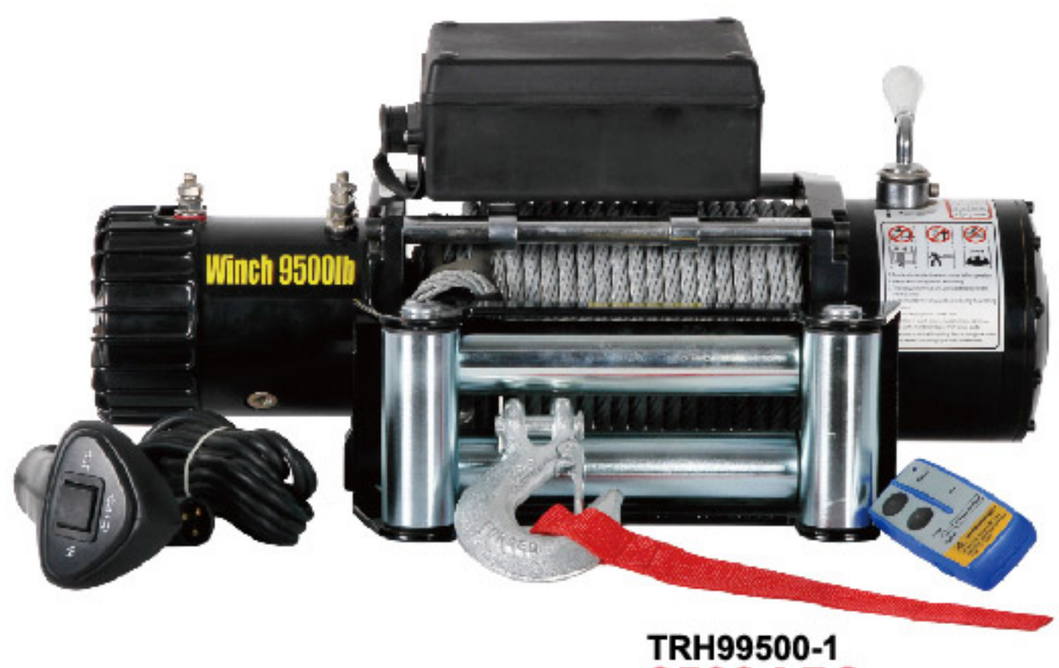

TRH99500-1
9500 LBS

Model	Capacity (lbs)	N.W. (kgs)	G.W. (kgs)	Package Size (mm)	QTY/20'CY (PCS)
TRH92000	2000	6	6.5	325x230x180	2000
TRH92500	2500	7.5	8.1	340x290x170	1600
TRH96000-1	6000	25	26	520x340x250	600
TRH98000	8000	33.8	34.85	600x340x250	540
TRH99500-1	9500	33	34	600x340x250	540

Electric Handy Winch

Model: TRC9202
Capacity: 2000 LBS
N.W.: 8 kgs
G.W.: 9 kgs
Package Size:
315x260x225 mm
QTY/20'CY : 1200 PCS

TRC9202
2000 LBS

Hand Winch

Steel Cable

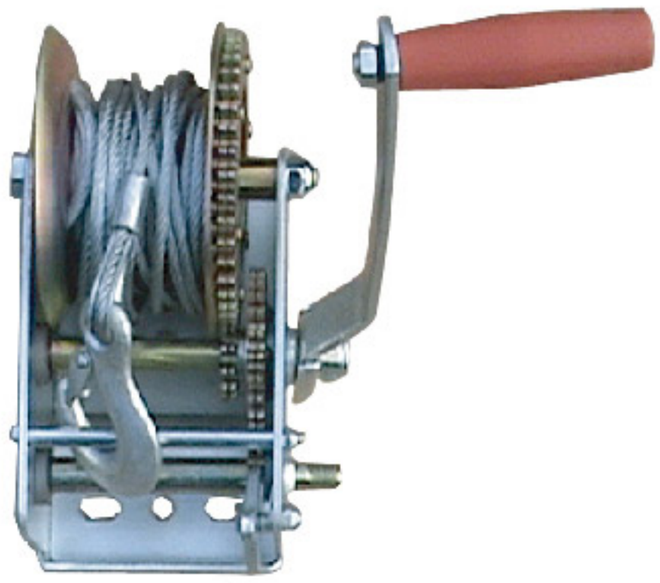

TRT1060C 600 LBS
TRT1101C 1000 LBS
TRT1161C 1600 LBS
TRT1201C 2000 LBS
TRT1301C 3000 LBS

Model	TRT1061C	TRT1101C	TRT1161C	TRT1201C	TRT1301C
Capacity	600 LBS	1000 LBS	1600 LBS	2000 LBS	3000 LBS
N.W. / G.W.(kgs):	13 / 15	18.5 / 20.5	16.5 / 18.5	20.5 / 22.5	02.5 / 22.5
Package Size(mm):	590x260x160	660x270x180	460x310x200	520x310x200	540x310x220
QTY/CTN:	6 PCS	6 PCS	4 PCS	4 PCS	4 PCS
QTY/20'CY:	1050 PCS	800 PCS	900 PCS	800 PCS	700 PCS

Model	TRT1061S	TRT1101S	TRT1161S	TRT1201S	TRT1301S
Capacity	600 LBS	1000 LBS	1600 LBS	2000 LBS	3000 LBS
N.W. / G.W.(kgs):	11.5 / 13.5	16.5 / 18.5	14 / 16	18 / 20	20.5 / 22.5
Package Size(mm):	590x260x160	660x270x180	460x310x200	520x310x200	540x310x220
QTY/CTN:	6 PCS	6 PCS	4 PCS	4 PCS	4 PCS
QTY/20'CY:	1050 PCS	500 PCS	900 PCS	800 PCS	700 PCS

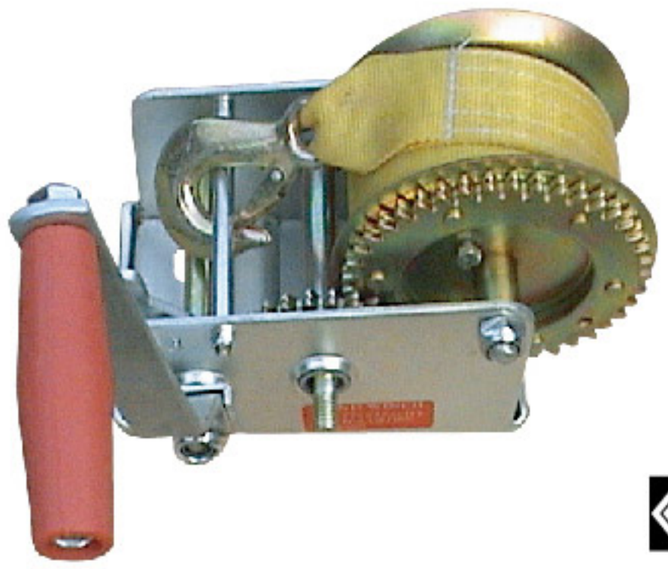

Nylon Belt

TRT1060S 600 LBS
TRT1101S 1000 LBS
TRT1161S 1600 LBS
TRT1201S 2000 LBS
TRT1301S 3000 LBS

Chain Block

TRC9005
0.5 Ton
TRC9010
1 Ton
TRC9015
1.5 Ton

TRC9020
2 Ton

TRC9030
3 Ton

TRC9050
5 Ton

TRC9100
10 Ton

Model	Capacity (Ton)	Lift Height (m)	Headroom (Hook to Hook) (mm)	Chainpull to Lift Full Load	No. of Load Chain	N.W. / G.W. (kgs)	Package Meas. (L x W x H) (mm)	QTY/20'CY (PCS)
TRC9005(HS0.5)	0.5	2.5	240	260N	1	8.7 / 8.9	250x180x140	1910
TRC9010(HS1)	1	2.5	300	330N	1	9.1 / 9.3	250x180x140	1875
TRC9015(HS1.5)	1.5	2.5	360	370N	1	15.1 / 15.5	300x220x160	1200
TRC9020(HS2)	2	2.5	380	330N	2	12.3 / 12.6	280x190x140	1417
TRC9030(HS3)	3	3	470	390N	2	21.5 / 22	310x220x160	807
TRC9050(HS5)	5	3	600	420N	2	35 / 35.5	390x270x200	500
TRC9100(HS10)	10	3	730	450N	4	65 / 70	580x430x250	236

Chain Block

TRC9005S
0.5 Ton

TRC9010S
1 Ton

TRC9020S
2 Ton

Patent Design
Heavy Duty Plastic Case

Model	Capacity (Ton)	Length of Chain (m)	N.W. / G.W. (kgs)	Package Size (mm)	QTY/20'CY (PCS)
TRC9005S	0.5	2.5	8.7 / 9.6	370x155x250	1800
TRC9010S	1	3	9.8 / 10.7	370x155x250	1800
TRC9020S	2	3	13.2 / 14.1	370x155x250	1400

Chain Trolley

Model	Capacity (Ton)	Length of Chain (m)	N.W. / G.W. (kgs)	Package Size (mm)	QTY/20'CY (PCS)
TRC9405	0.5	3	10 / 10.5	280x200x160	1628
TRC9410	1	3	10.5 / 11	300x230x200	1368
TRC9420	2	3	15.5 / 16	320x270x220	900
TRC9430	3	3	22 / 22.5	335x310x260	633
TRC9450	5	3	37 / 42	390x340x300	633
TRC9500	10	3	78.5 / 89	480x440x410	202

Chain Block

TRC90051
0.5 Ton

TRC90101
1 Ton

TRC90151
1.5 Ton

TRC90201
2 Ton
Double chain

TRC90301
3 Ton
Double chain

TRC90501
5 Ton
Double chain

TRC91001
10 Ton
Double chain

Model	Capacity (Ton)	Lift Height (m)	Headroom (Hook to Hook) (mm)	Chainpull to Lift Full Load	No. of Load Chain	N.W. / G.W. (kgs)	Package Meas. (L x W x H) (mm)	QTY/20'CY (PCS)
TRC90051(HS0.5)	0.5	2.5	295	260N	1	7 / 7.3	240x170x130	2400
TRC90101(HS1)	1	2.5	330	323N	1	9.8 / 10	250x180x140	1800
TRC90151(HS1.5)	1.5	2.5	410	395N	1	18 /18.5	360x205x150	950
TRC90201(HS2)	2	3	430	346N	2	15.2 / 15.6	290x200x150	1100
TRC90301(HS3)	3	3	530	390N	2	21 / 21.5	360x205x160	790
TRC90501(HS5)	5	3	588	505N	2	37 / 38	480x245x185	460
TRC91001(HS10)	10	3	700	520N	4	68 / 84	160x480x260(wood)	250

Double Lever Block

TRC7005 **0.5 Ton**

TRC7075 **0.75 Ton**

TRC7010 **1 Ton**

TRC7015 **1.5 Ton**

TRC7020 **2 Ton**

TRC7030 **3 Ton**

TRC7062 **6 Ton**

Model	Capacity (Ton)	Lift Height (m)	N.W. / G.W. (kgs)	Package Meas. (L x W x H) (mm)	QTY/20'CY (PCS)
TRC7005(HSHY0.5)	0.5	1.5	3.8 / 4	350x100x130	4186
TRC7075(HSHY0.75)	0.75	1.5	6.4 / 6.8	360x140x170	2340
TRC7010(HSHY1)	1	1.5	6.6 / 7	360x140x170	2340
TRC7015(HSHY1.5)	1.5	1.5	10.1 / 10.5	470x140x190	1520
TRC7020(HSHY2)	2	1.5	10.3 / 10.7	470x140x190	1520
TRC7030(HSHY3)	3	1.5	17.5 / 18	485x180x210	910
TRC7062(HSHY6)	6	1.5	26 / 27	560x250x220	645

Electric Chain Hoist

- Ideal for lifting heavy materials with minimum power.
- Triple spur gear.
- Safety hooks included.
- Safety brake prevents slipping.

ROHS / PAHS

Model	Hook	Capacity (kgs)	Rated Volt	Input Power (w)	Rated Lifting Weight (kgs)	Lifting Speed (m/min)	Lifting Height (m)	N.W/G.W (kgs)	Package Size (mm)	QTY/ CTN (pcs)	QTY/ 20'CY (pcs)	MOQ
TRYT100	Single hook	100	220-240V	500	100	8	12	21.5/22	376x305x250	2	2000	50
	double hook	200			200	4	6					
TRYT125	Single hook	125	220-240V	500	125	8	12	21.5/22	376x305x250	2	2000	50
	double hook	250			250	4	6					
TRYT150	Single hook	150	220-240V	550	150	8	12	22/22.5	376x305x250	2	1900	50
	double hook	300			300	4	6					
TRYT200	Single hook	200	220-240V	1000	200	8	12	33.5/34	415x330x270	2	1300	50
	double hook	400			400	4	6					
TRYT250	Single hook	250	220-240V	1000	250	8	12	33.5/34	415x330x270	2	1300	50
	double hook	500			500	4	6					
TRYT300	Single hook	300	220-240V	1050	300	8	12	34.5/35	415x330x270	2	1250	50
	double hook	600			600	4	6					
TRYT400	Single hook	400	220-240V	1300	400	8	12	39.5/40	445x330x270	2	1150	50
	double hook	800			800	4	6					
TRYT500	Single hook	500	220-240V	1600	500	8	12	32/33	555x245x355	1	600	50
	double hook	999			999	4	6					

Electric Chain Hoist

Shell: Light aluminum alloy shell shall be adopted wich is light but hard and fit for the use in the terrible work environment with a high heat dissipation rate and all tightness design.
Inverse phase sequence protecting device:It is the special electrical installation which control the circuit not to work in case of wiring error in the power supply.
Limit switch: The limit switch device is installed where the weight is lifted on and off to make the motor to stop automatically so as to prohibit the chains from exceeding for safety.
24V/36V decice: It is used to prohibit the emergencies from occurring in case of the leakage in the switch.
Side magnetic braking device: This device shall realize the instant brake in case of the power dump.
Chain bag: It shall be light, handsome and durable.
Chain: The chain shall adopt the imported FEC80 ultra heat-treatable Alloy steel chain.

TRC9E0051B
0.5 Ton
TRC9E0101B
1 Ton
TRC9E0201B
2 Ton

TRC9E0301B
3 Ton

TRC9E0501B
5 Ton

TRC9E1001B
10Ton

Type	Capacity (Ton)	Lifting Height (m)	Lifting Speed (m/min)	Lifting Motor					I-Beam (mm)	N.W./G.W. (kgs)	Package size (mm)	QTY/20'CY (PCS)
				Power (Kw)	Rotation Speed (r/min)	Phases	Voltage (V)	Frequency (Hz/s)				
TRC9E0051B	0.5	3	6.8	0.8	1440	3	220/440	50/60	58-127	30/35	400x380x350	200
TRC9E0101B	1	3	6.6	1.5	1440	3	220/440	50/60	68-130	61/68	600x350x530	150
TRC9E0201B	2	3	6.6	3.0	1440	3	220/440	50/60	82-153	115/124	700x440x600	140
TRC9E0301B	3	3	5.4	3.0	1440	3	220/440	50/60	82-153	131/142	700x440x600	125
TRC9E0501B	5	3	2.7	3.0	1440	3	220/440	50/60	100-178	151/162	700x440x600	80
TRC9E1001B	10	3	2.7	3.0x2	1440	3	220/440	50/60	150-220	300/330	950x700x860	36

Moving Trolley

Type	Capacity (Ton)	Speed 50Hz (m/min)	Motor (Kw)	Minimum radius of ture	QTY/20'CY (PCS)
TRC9E0052	0.5	212.2 / 24	0.12	0.8	230
TRC9E0102	1	11 / 21	0.4	0.8	160
TRC9E0202	2	11 / 21	0.4	0.8	150
TRC9E0302	3	11 / 21	0.75	1.0	140
TRC9E0502	5	11 / 21	0.75	1.8	90
TRC9E0752	7.5	11 / 21	0.75	2.5 (3.0)	80
TRC9E1002	10	11 / 21	0.75	2.5 (3.0)	70

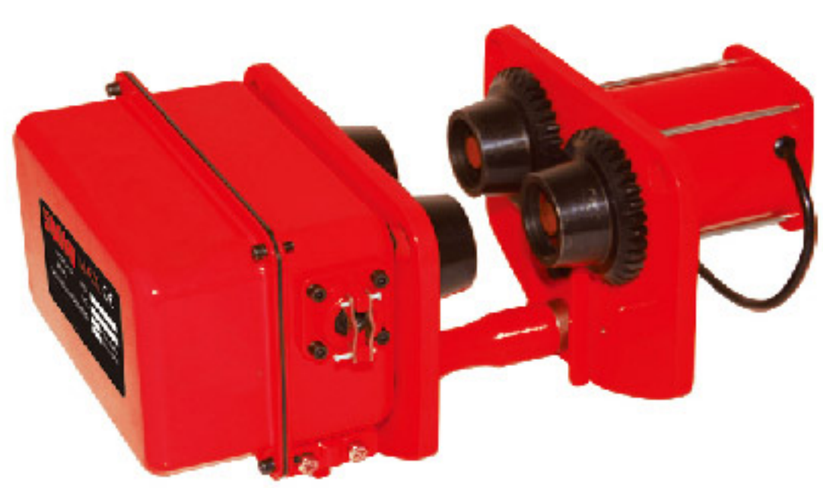

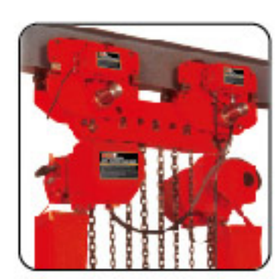

Vehicle Bike Rack

TRF2590B-F

Model: TRF2590B-F
Package Size: 720x430x230 mm
N.W.: 4.5 kgs
G.W.: 4.7 kgs
QTY/CTN: 4 PCS
QTY/20'CY: 1500 PCS

Double Safety Lock

Model: TRF2590
Product Size(WxDxH): 590x270x720 mm
Package: 100x260x170 mm
N.W.: 3 kgs
G.W.: 3.5 kgs
QTY/CTN: 6 PCS
QTY/20'CY: 4320 PCS

TRF2590

Bike Carrier

TRF2594

Model: TRF2594
Package Size: 800x580x120 mm
N.W.: 4 kgs
G.W.: 5 kgs
QTY/20'CY: 500 PCS

3 PCS Bikes

Model: TRF2599
Package Size:
780x385x190 mm
N.W.: 5.8 kgs
G.W.: 6.8 kgs
QTY/20'CY: 480 PCS

4 PCS Bikes

TRF2599

TRF2598

2 PCS Bikes

Model: TRF2598
Package Size:780x385x190 mm
N.W.: 5.3 kgs
G.W.: 6.3 kgs
QTY/20'CY: 480 PCS

Hanging Bike Rack

Steel construction bicycle lift with unique pulley locking mechanism system easily lifts a bike up and away for easy storage.
Saves space and protects tires.
46ft. PP rope and mounting hardware included.
Lifts up to 20kg.

TRF2571

Model: TRF2571
Overall Size: 530x270x275 mm
Package Size: 995x275x155 mm
N.W.: 1.8 kgs/PC
G.W.:1.9 kgs/PC
QTY/CTN: 10 PCS
QTY/20'CY: 7100 PCS

Heavy Duty Air Compressor

Model: TRTH20C
Power supply:12V,Rated current:10A
Max pressure:140PSI
Cylinder diammeter:30mm,
Max.air flow:35L/Min
Duration working time:15minutes
Package Size:400x260x360mm
8 PCS/CTN:13.5kgs
QTY/20'CY: 6000 PCS
MOQ:50 PCS

TRTH20C

CE

Model: TRTH20A

Power supply: DC 12V
Max.pressure: 150 PSI
Max.air flow: 35 L/Min
7.5 M air hose(PU) with a 150 PSI high-quality pressure gauge
Duration working time: 15 minutes
With thermal overload protector
3 PCS nozzle adapters
Package Size:170x90x160 mm
Carton Size: 540x330x365 mm
4 PCS/CTN: 14 kgs
QTY/20'CY: 1752 PCS
MOQ:50 PCS

TRTH20A

CE

Heavy Duty Air Compressor

LED Light

Model: TRTH30A
Power supply:DC12V, max rated curent:23A
Max pressure:150PSI
Cylinder diammeter:30mm,
Max.air flow:45L/min
Duration working time:15minutes
Package Size:550x340x430mm
8 PCS/CTN:21kgs
QTY/20'CY: 2800 PCS
MOQ:50 PCS

TRTH30A

CE

Paper Towel Stand

TRM4901
N.W.: 2.25 kgs
G.W.: 2.8 kgs
Package Size:
840x710x430 mm
QTY/CTN:10 PCS
QTY/20'CY: 950 PCS

TRM4902
N.W.: 1.5 kgs
G.W.: 1.6 kgs
Package Size:
270x240x360 mm
QTY/20'CY: 1000 PCS

Tire Rack

TAZ8253
Package Size: 712x724x76 mm
N.W.:15.3 kgs
G.W.:16.7 kgs
QTY/20'CY: 750 PCS

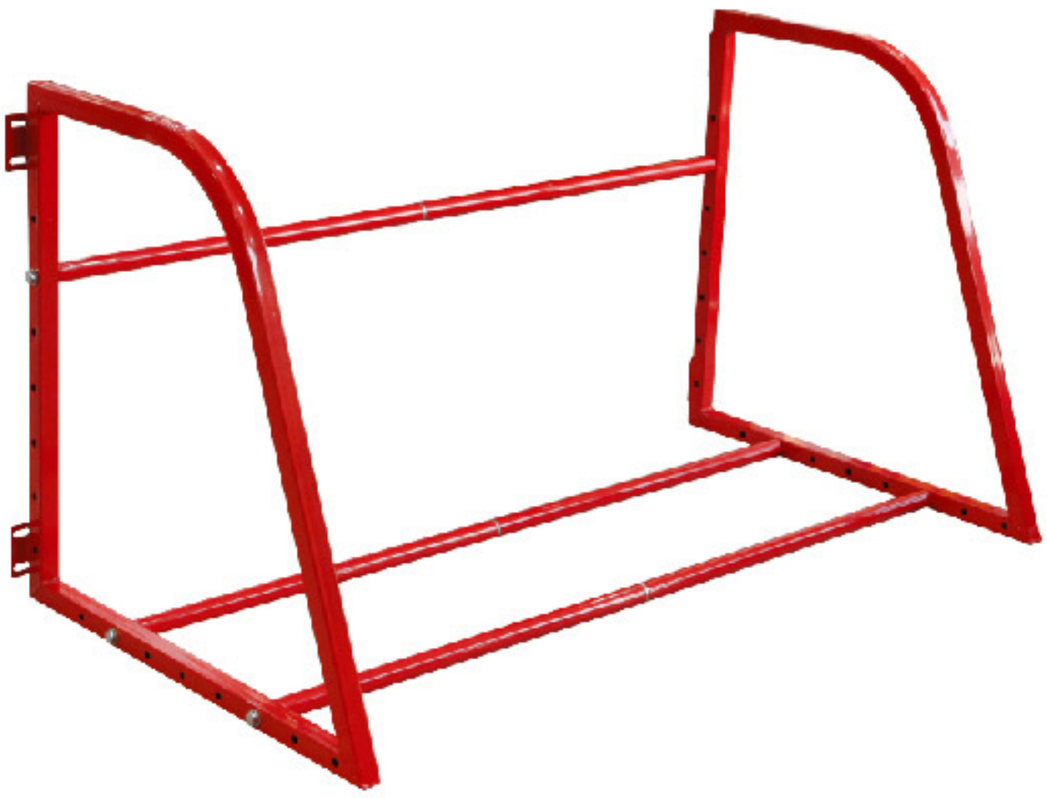

- For holding max. 4 wheels.
- Suit for wheels up to 225mm.
- Capacity up to 100 kgs.
- Easy assembled.

TRF8401
Package Size: 545x315x485 mm
N.W.: 2.2 kgs
G.W.: 2.8 kgs
QTY/CTN: 10 PCS
QTY/20'CY: 3500 PCS

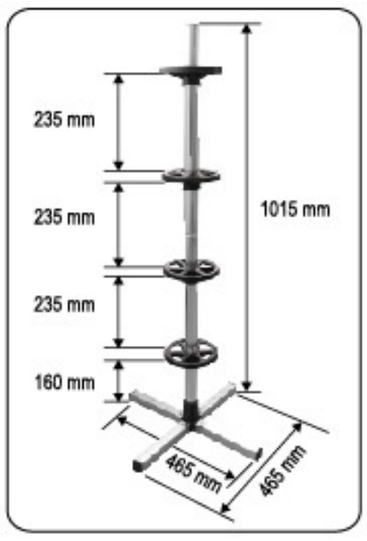

Polyester Cover
(Option)

TRF8402
Package Size:
545x315x485 mm
N.W.: 2.6 kgs
G.W.: 3 kgs
QTY/CTN: 10 PCS
QTY/20'CY: 3500 PCS

Polyester Cover
(Option)

Brake
Wheel

Coat Hanger

Suitable for suits, jackets, overcoat,...etc.
For traveling business people on the move.
Can be fitted to any head rest measuring 16mm or less.
Made of chrome-plated steel.

TRQ20051
Width: 49 cm
Package Size:
1020x285x500 mm
N.W.: 0.75 kgs
G.W.: 0.9 kgs
QTY/CTN: 20 PCS
QTY/20'CY: 3800 PCS

TRQ20052
Package Size:
485x180x55 mm
N.W.: 0.19 kgs
G.W.: 0.4 kgs
QTY/20'CY: 3800 PCS

Aluminum Loading Ramp

TRF4501
200 kgs/pc

Load Capacity: 200 kgs/pc
Demensions: 1795x293x60 mm
Package Size: 950x315x170 mm
N.W.: 7 kgs
G.W.: 8 kgs
QTY/20'CY: 588 PCS

ALUMINUM

ATV Loading Ramp

ATV Loading Ramp provides you with a way to easily load and unload your ATV and power equipment in and out of the back of a pickup truck. These ramps make transporting your ATV a simple task and a non-skid surface ensures safety in all conditions.

Length: 2160 mm
Folded Length: 1110 mm
Width: 280 mm
Load Capacity: 340 kgs/pc
N.W.: 6.5 kgs
G.W.: 7 kgs
Package Size: 1130x290x300 mm
QTY/CTN: 2 PCS
QTY/20'CY: 560 PCS

ALUMINUM

TRT7501
340 kgs/pc

ATV Loading Ramp

ATV Loading Ramp provides you with a way to easily load and unload your ATV and power equipment in and out of the back of a pickup truck. These ramps make transporting your ATV a simple task and a non-skid surface ensures safety in all conditions.

Length: 2260 mm
Folded Length: 1160 mm
Width: 295 mm
Load Capacity: 340 kgs/pc
N.W.: 7.2 kgs
G.W.: 8.2 kgs
Package Size : 1170x300x310 mm
QTY/CTN: 2 PCS
QTY/20'CY: 560 PCS

ALUMINUM

TRT7502
340 kgs/pc

UTV Loading Ramps

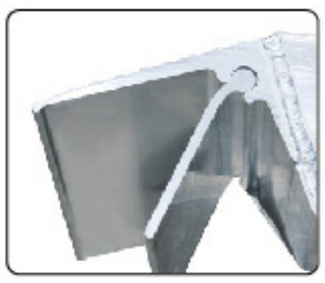

ALUMINUM

TRT40001
1400 kgs/pc

Load capacity: 2800 kgs/pair
Length: 2490mm
Windth: 305mm
Thickness: 110mm
N.W.: 19 kgs/pair
G.W.: 20 kgs/pair
Packaging Size: 2520x310x130 mm
QTY/20'CY: 245 Sets

Triple Folding Ramp

This is the most portable and compact ramp available.
It folds quickly and easily, it is very suitable for ATV to go up and down.

Length: 1990 mm
Folded Length: 720 mm
Width: 300 mm
Load Capacity: 270 kgs/pc
N.W.: 7 kgs
G.W.: 8 kgs
Package Size: 370x315x730 mm
QTY/CTN: 2 PCS
QTY/20' CY: 672 PCS

ALUMINUM

TRT07508
270 kgs/pc

Vehicle Ramps

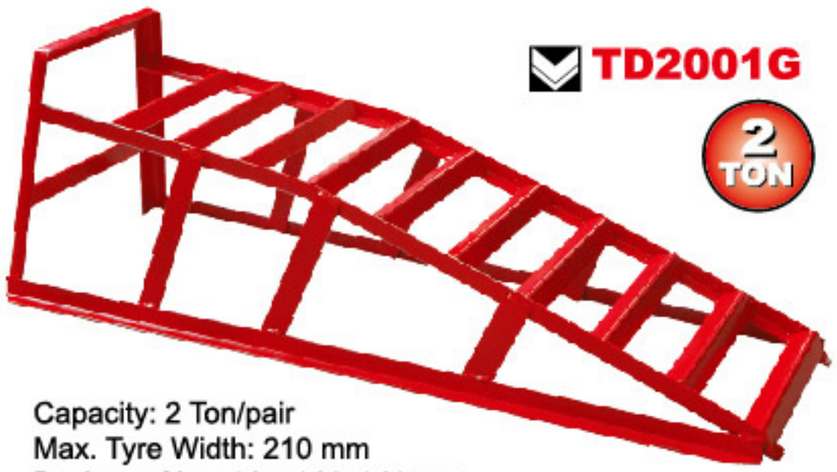

TD2001G

2 TON

Capacity: 2 Ton/pair
Max. Tyre Width: 210 mm
Package Size: 865x320x910 mm
N.W.: 5.6 kgs
G.W.: 6 kgs
QTY/CTN: 10 PCS
QTY/20'CY: 900 PCS

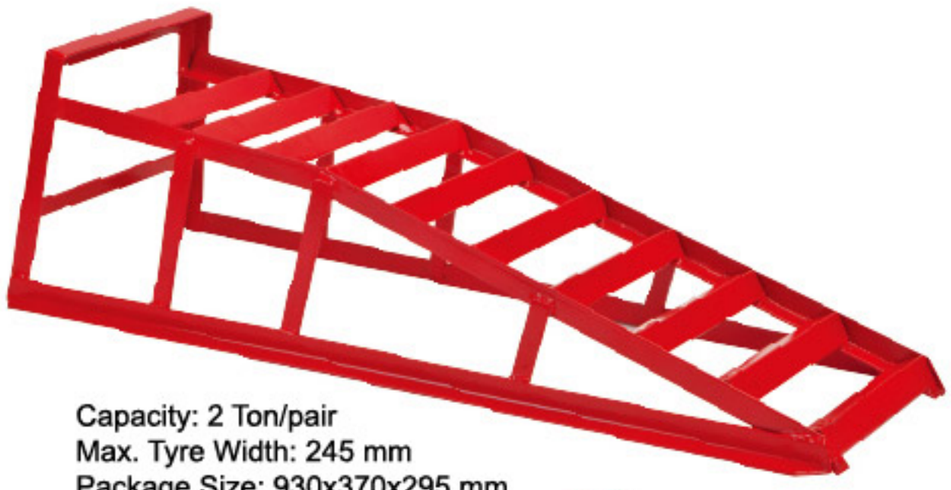

Capacity: 2 Ton/pair
Max. Tyre Width: 245 mm
Package Size: 930x370x295 mm
N.W.: 7.9 kgs
G.W.: 8.4 kgs
QTY/CTN: 2 PCS
QTY/20'CY: 430 PCS

2 TON

TRD2006

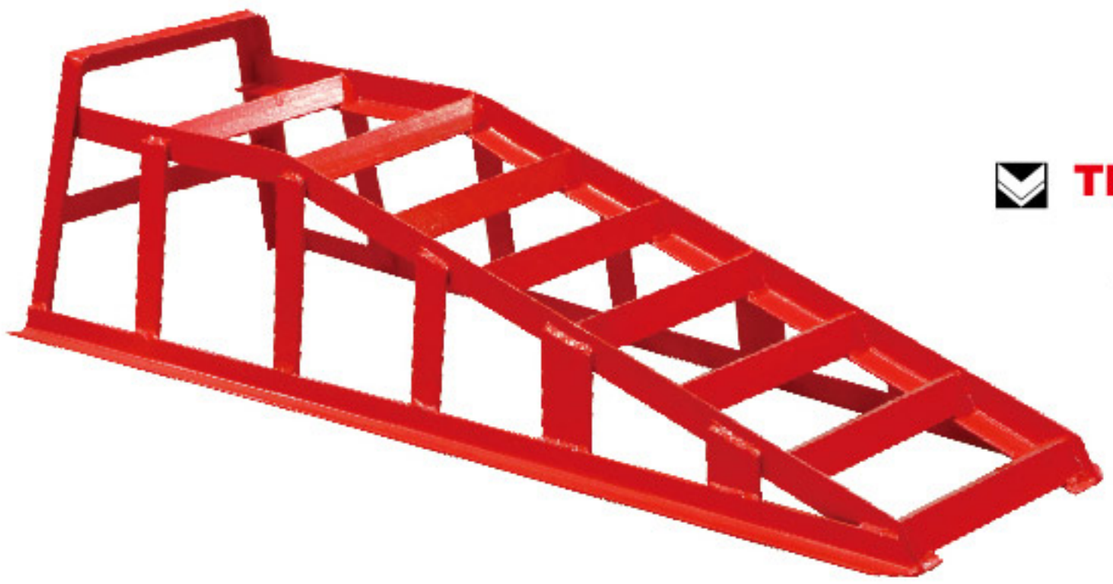

TRD2003

3 TON

Capacity: 3 Ton/pair
Max. Tyre Width: 270 mm
Package Size:
1150x375x450 mm
N.W.: 12.1 kgs
G.W.: 16 kgs
QTY/CTN: 2 PCS
QTY/20'CY: 600 PCS

Features:

Stronger than steel ramps allow you to work confidently under cars, trucks and SUVs, including low-clearance vehicles. Constructed of super-strong structural form plastic. Improved tread pattern increases traction and reduces shifting. Core-Trac nonskid feet, space-saving stackable design.

2.5 TON

Plastic, Nestable
Widest , Strongest

TRD2005

Capacity: 2.5 Ton/pair
Max. Tyre Width: 240 mm
Package Size: 930x340x315 mm
N.W.: 4 kgs
G.W.: 4.3 kgs
QTY/CTN: 2 PCS
QTY/20'CY: 640 PCS

SOLD PAIRS

TRD2008

Material: PP
Dirrensicn: L/W/H=905/330/215mm
N. W=10KG/set
Working Widtht 265mm
Lift Height: 175mm
Padking: 2pce/carton, 91. 5x32x35. 5cm
G. V. W: 18000lbs
MOQ:200 Pairs

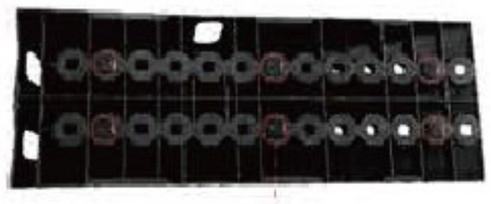

Anti-skid rubber stopper

Geared Lug Wrench

The product with its 16:1 revolution ratio eliminates the hassle of tightening or loosening nuts of the cars.
This product includes 17mm, 19mm and 21mm half inch sockets.

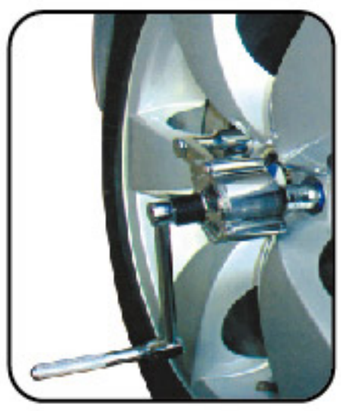

TRX31005
Ratio: 1:16

Model: TRX31005
N.W.: 2.25 kgs
G.W.: 2.37 kgs
Package Size: 340x295x230 mm
QTY/CTN: 4 PCS
QTY/20'CY: 3600 PCS

Chrome Plated

TRX31002
Ratio:1:68
Change Truck Tire

Model: TRX31002
N.W.: 8.05 kgs
G.W.: 8.25 kgs
Package Size: 400x380x250 mm
QTY/CTN: 4 PCS
QTY/20' CY: 2200 PCS

TRX31003
Ratio:1:58
Change Truck Tire

Model: TRX31003
N.W.: 7.5 kgs
G.W.: 7.6 kgs
Package Size: 370x360x220 mm
QTY/CTN: 4 PCS
QTY/20'CY: 2600 PCS

TRX31004
Two-speed
Change Truck Tire

Model: TRX31004
N.W.: 8.6 kgs
G.W.: 8.8 kgs
Package Size: 350x310x225 mm
QTY/CTN: 3 PCS
QTY/20'CY: 2200 PCS

Socket Size

Model: 17, 19, 21, 22, 24, 27, 30, 32, 33, 34, 36, 38, 41 mm

Ratio:1:58
Big Power Loose

Ratio:1:3
Quick Loose

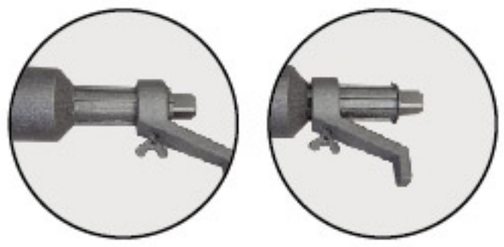

Handle can remove

T-spark Plug Wrench

Model	Specs (mm)	G.W/N.W (mm)	Package Size (mm)	QTY/ CTN	QTY/20"CY (PCS)	MOQ
TRXTP02	16	0.24/0.22	410x270x190	50	70000	100
TRXTP05	21	0.26/0.24	410x270x220	50	60000	100
TRXTH02	16	0.24/0.22	410x270x200	50	65000	100
TRXTH05	21	0.26/0.24	410x270x220	50	60000	100
TRXTS02	16/21	0.38/0.4	460x280x210	50	55000	100

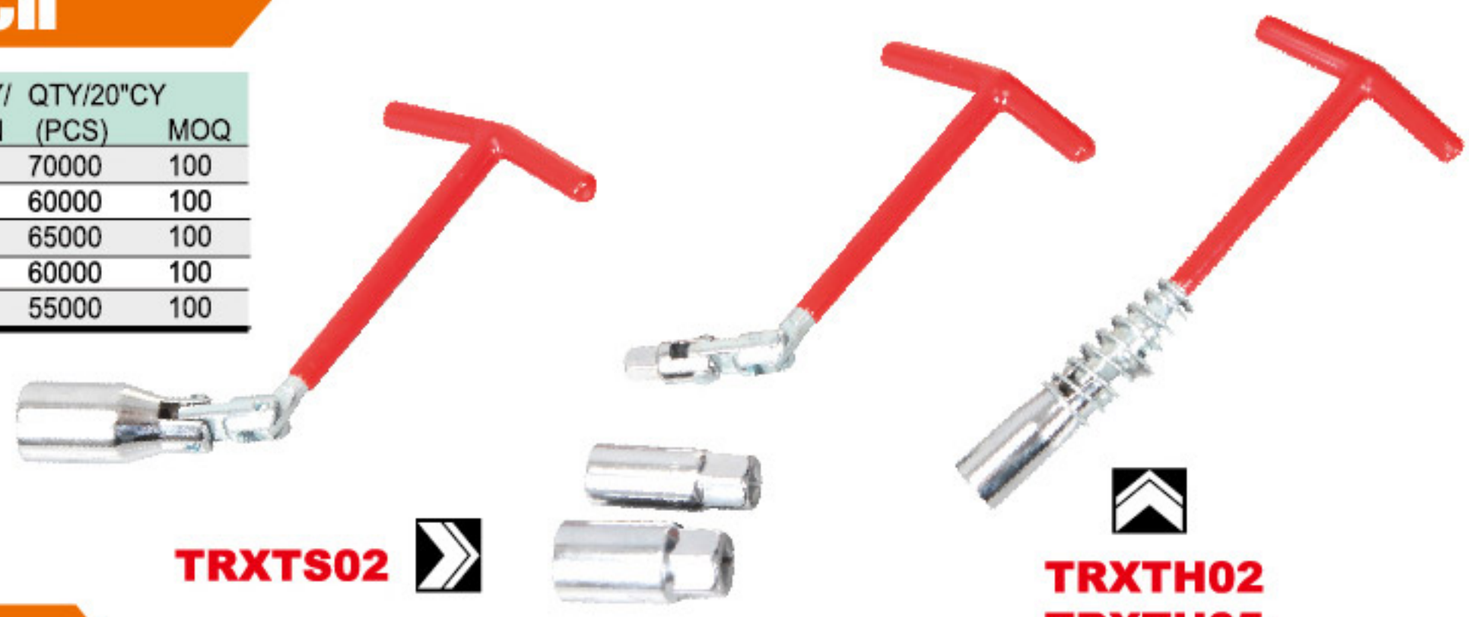

TRXTP02
TRXTP05

TRXTS02

TRXTH02
TRXTH05

Lug Wrench

TRX31101B

TRX31101
(03.1101)

TRX31301
(03.1301)

TRX31201
(03.1201)

Model	Specs (mm)	G.W. / N.W. (kgs)	Package Size (mm)	QTY/CTN (PCS)	QTY/20' CY (PCS)	MOQ (PCS)
TRX31101B	14" ⌀ 16x355	26 / 25	330x290x360	20	13140	50
	16" ⌀ 16x406	28 / 27	370x320x360	20	12200	50
	20" ⌀ 16x500	35 / 34	430x390x360	20	9360	50
TRX31101	14" ⌀ 16x355	26 / 25	330x290x360	20	13140	50
	16" ⌀ 16x406	28 / 27	370x320x360	20	12200	50
	20" ⌀ 16x500	35 / 34	430x390x360	20	9360	50
TRX31201	14" ⌀ 16x355	27 / 26	380x310x180	20	12660	50
TRX31301	14" ⌀ 16x355	27 / 36	350x290x360	20	12660	50
	15" ⌀ 16x380	29 / 27	370x310x360	20	11780	50

2-in-1 Lug Wrench

TRX83378

Telescoping Lug Wrench

Lug wrench extends from 370mm to 550 mm for maximum leverage

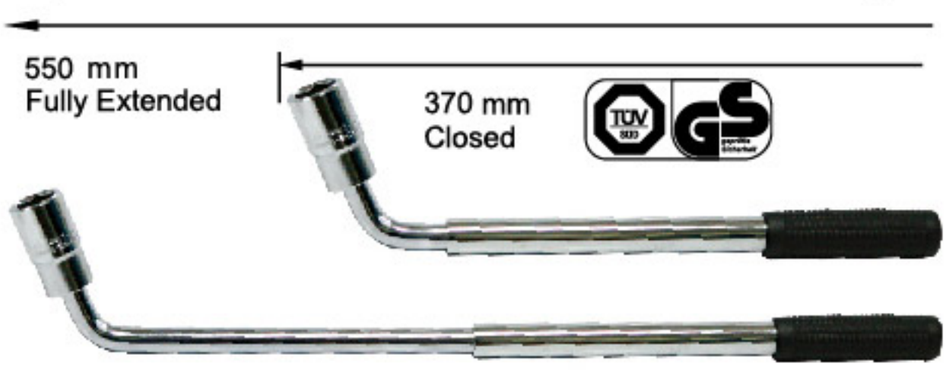

TRX83375

NEW PRODUCT

Model	Specs (mm)	G.W. / N.W. (kgs)	Package Size (mm)	QTY/CTN (PCS)	QTY/20' CY (PCS)	MOQ (PCS)
TRX83375	17/19/21/23	14.4/15.6	470x310x270	12	7800	100
TRX83378	17/19/21/23	13/14	410x200x120	10	13000	100

Bench Vise

TRJY-9122 4”
TRJY-9124 6”
TRJY-9125 8”

TRJY-1151 4”
TRJY-1153 6”
TRJY-1154 8”

TRJY-1081 4”
TRJY-1083 6”

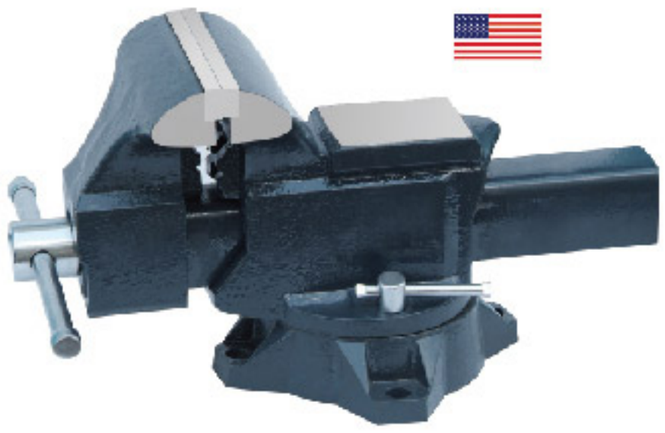

TRJY-1111 4”
TRJY-1113 6”
TRJY-1114 7”

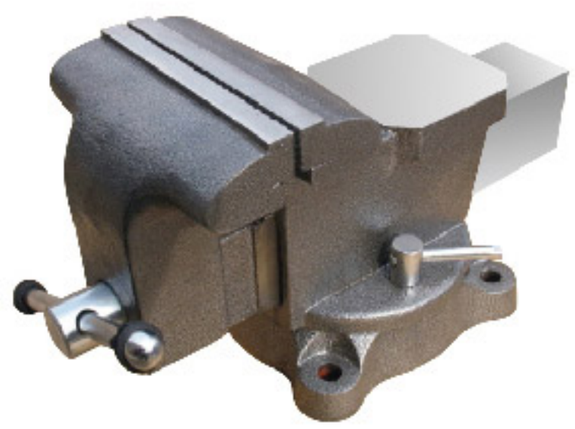

TRJY-1151L 4”
TRJY-1153L 6”
TRJY-1154L 8”

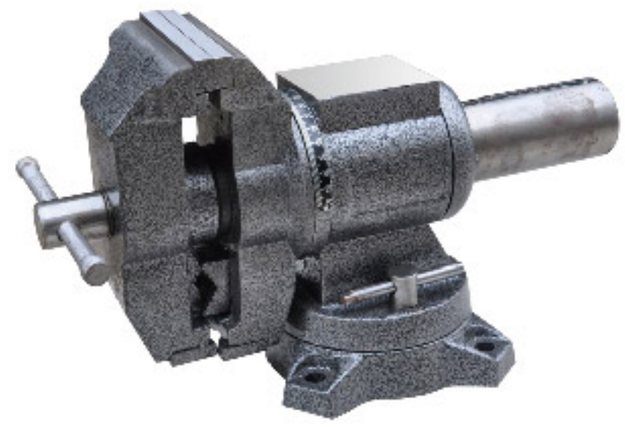

TRJY8133 5”

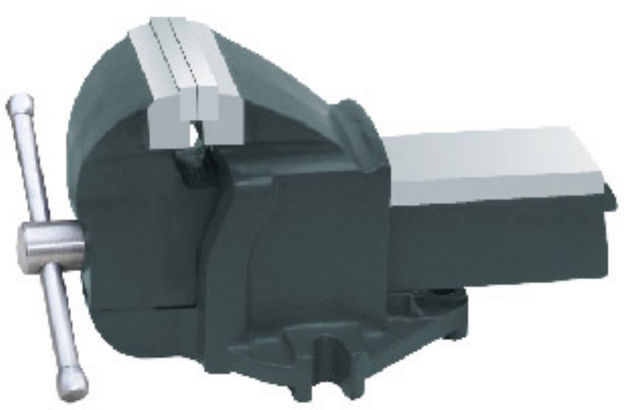

TRJY-1001 3” TRJY-1005 6”
TRJY-1003 4” TRJY-1006 8”

TRJY-8372 7kgs
TRJY-8373 11kgs

TRJY-8374 25kgs
TRJY-8375 35kgs
TRJY-8376 50kgs

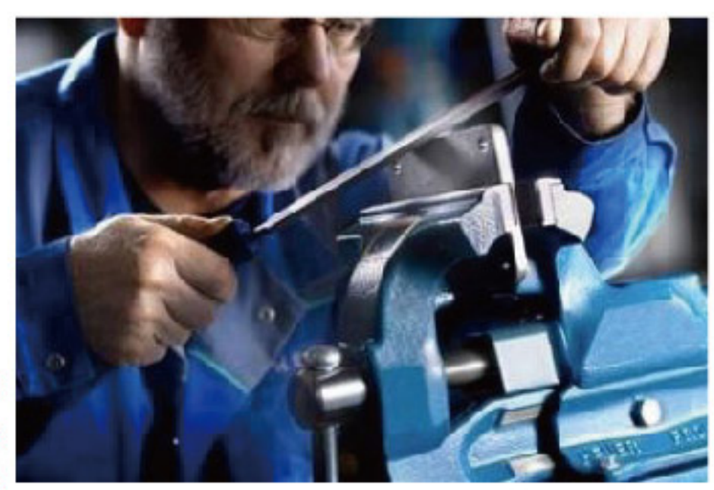

Model	Specifi	Openning (mm)	Clamping Force (Kgs)	Qty/ctn (Pcs)	N.W./G.W. (Kgs)	Package Size (mm)	MOQ
TRJY-9122	4”	65-75	600	1	6.5/6.0	305x130x160	300
TRJY-9124	6”	110-125	1000	1	13/12	345x220x200	300
TRJY-9125	8”	125-150	1000	1	19/18	410x2105x220	300
TRJY-1151	4”	102	1000	1	11.5/10.5	370X180X200	300
TRJY-1153	6”	153	1500	1	21.5/20	450X2105X240	300
TRJY-1154	8”	200	2000	1	32/30	560X270X280	300
TRJY-1081	4”	75	900	1	6/5	300X200X310	300
TRJY-1083	6”	125	1500	1	16/14.5	360X350X210	300
TRJY-1111	4”	100	1000	1	10/9	340X320X220	300
TRJY-1113	6”	150	1500	1	20/19	460X210X260	300
TRJY-1114	7”	178	1800	1	24/23	480X230X290	300
TRJY-8133	5”	100-125	1800	1	30/28	470x250x240	300

Model	Specifi	Openning (mm)	Clamping Force (Kgs)	Qty/ctn (Pcs)	N.W./G.W. (Kgs)	Package Size (mm)	MOQ
TRJY-1151L	4”	100	900	1	8/7	290X150X150	300
TRJY-1153L	6”	150	1200	1	16.5/15	360X180X200	300
TRJY-1154L	8”	200	1500	1	23/21	440X190X220	300
TRJY-1001	3”	95	1500	1	6.5/5.5	280X140X150	300
TRJY-1003	4”	140	2200	1	20/19	410X200X210	300
TRJY-1005	6”	195	3000	1	32/31	530X300X250	300
TRJY-1006	8”	230	3100	1	39/37.5	580X310X280	300
TRJY-8372	7kgs	n/a	n/a	1	7.5/7	240x140x150	300
TRJY-8373	11kgs	n/a	n/a	1	11.5/11	260x150x170	300
TRJY-8374	25kgs	n/a	n/a	1	26/25	380x220x220	300
TRJY-8375	35kgs	n/a	n/a	1	36.5/35	410x220x210	300
TRJY-8376	50kgs	n/a	n/a	1	52/50	470x240x230	300

Hydraulic Puller

NEW PRODUCT

360 Degree Rotatory Pump Handle, Integral Safety Vavel, Chrome Vanadiumplated, with Spring Draw Back.

CE

TRK208 Series

Model	Capacity	Spread Range (mm)	Max. Pull Range(mm)	Cylinder Stroke (mm)	N. W. /G. W. (kg)	PCS/CTN	Package size (mm)	Qty/20'
TRK208-5	5 TON	50-200	140	50	6.8/7.25	2 sets	Plastic case 490x245x200	1976
TRK208-10	10 TON	50-250	160	60	10.2/10.5	2 sets	Plastic case 490x245x200	1600
TRK208-15	15 TON	50-300	180	60	11.5/12	1 set	Plastic case 560x270x120	1400
TRK208-20	20 TON	50-350	200	55	16.5/17	1 set	Plastic case 560x270x120	893
TRK208-30	30 TON	50-400	250	55	19/20	1 set	Wooden case 470x240x110	840
TRK208-50	50 TON	50-400	250	70	22/24	1 set	Wooden case 470x240x110	700

TRCP700

TRCP180

CE

NEW PRODUCT

TRK308 Series

Model	Capacity	Spread Range (mm)	Max. Pull Range(mm)	Cylinder Stroke (mm)	N. W. /G. W. (kg)	Package size (mm)	Suitable Hand	Qty/20'
TRK308-5	5 TON	50-200	140	50	10/11	Metal case 730x180x180	TRCP-180	1527
TRK308-10	10 TON	50-250	160	60	12/13	Metal case 730x180x180	TRCP-180	1292
TRK308-15	15 TON	100-300	180	60	18/19	Metal case 730x180x180	TRCP-180	884
TRK308-20	20 TON	100-350	200	70	20/21	Wooden case 730x210x190	TRCP-180	800
TRK308-30	30 TON	100-400	250	70	26/28	Wooden case 730x230x200	TRCP-700	600
TRK308-50	50 TON	300-600	400	75	39/41	Wooden case 730x250x210	TRCP-700	409
TRK308-100	100 TON	300-600	450	100	117/122	Wooden case 1030x700x280	TRCP-700	137

Engine Tools

PROFESSIONAL GRADE

TRHS-2570

7Pcs Sensor Socket Set

- N.W/G.W:21/22 kgs
- QTY/CTN:10 PCS
- PACKAGE:560x240x200 mm

Contents

Special socket for removing oxygen Sensor Include:
1/2" Drx29mmx90mmL(7mmslot)
1/2" Dr x27mm(12pt) x82mml
3/8" Dr x7/8" x 90mml(20mm slot)
3/8" Drx1-1/16" x74mmL
3/8" Dr. x 7/8" x80mmL
1/2" Dr x 22mmx50mmL
3/8" Dr x22mmx31mmL

- MOQ:10 PCS

TRHS-3206

Press and pull sleeve kit 27pcs

- N.W/G.W:18/19 kgs
- QTY/CTN:1 PCS
- PACKAGE:470x420x120 mm

Contents

22x press-on sleeves, inside Diameter 34,36,38,40,42, 44,46,48,50,52,54,56,58,60,62,64,66,68,70,72,75,80mm
Outside Diameter:44,46,48,50,52,54,56,58,60,62,64,66, 68,70,72,74,76,78,80,82,85,90mm
5xpulling spindle nuts, Sizes:M10 M12 M14 M16 M18

- MOQ:10 PCS

TRHS-E1000

Petrol Engine Timing Kit Opel & Vauxhall 1.0 1.2 1.4

- Kit includes all the locking tools to time the chain on 1.0 1.2 1.4 ecotec twin cam engines.
- Also includes the timing disc position gauge for positioning the timing sensor disc ftted to the inlet camshaft
- N.W./ G.W.: 1.4 kgs / 1.5 kgs
- Package Size: 560x250x200 mm
- QTY/CTN:10 PCS
- MOQ: 10 PCS

TRHS-0135

16Pcs Glow Plug Removal Set

- N.W/G.W: 8/9 kgs
- QTY/CTN: 5 PCS
- PACKAGE:430x400x320 mm

Contents

Flow meter set for common Rail Diesels with 24pcs adaptors.
For measuring the amount of fuel injectors return to the deposit tank
For use on up to 6 Injectors
Adaptors for Bosch/Siemens/Denso/Delphi Injector

- MOQ:10 PCS

TRHS-E2660

Metric Bushing Driver Set Components (64 PCS)

- Easily repair sump,gearbox and differential drain plug threads.
- Tap the damaged thread, then fit a new drain plug and washer supplied.
- Set is suitable for the most popular threads used on cars and light commercial vehicles.
- Tap Sizes: M13, M15, M17, M20.
- N.W./ G.W.: 1.37kgs / 1.43 kgs
- Package Size: 395x295x410 mm
- QTY/CTN: 16 PCS
- MOQ: 16 PCS

TRHS-A1020A

TU-15 Cylinder Pressure Meter for Diesel Truck

- Quick connect/disconnect feature allows one gauge to be used with variety of quick adapters for most popular diesel engines.
- Push pressure scale: 0-1000 PSI 0-70 Bar
- N.W./ G.W.: 2.1 kgs / 2.3 kgs
- Package Size: 405x295x400 mm
- QTY/CTN: 5 PCS
- MOQ: 10 PCS

TRHS-A1020C

TU-15 Cylinder Pressure Meter for Diesel Truck

- A comprehensive kit for testing the compression on both petrol and diesel vehicles.
- Features 600psi gauge with large rubber bumper, straight and right angled quick connect fittings and an extensive range of spark/glow plug and injector adaptors.
- This kit will cover most modern car, van, truck, bus, agricultural and marine engines.
- Spark Plug Sizes: 10, 12, 14, 18mm.
- Glow Plug Adaptors: Alfa Romeo,BMW, Chrysler, Citroen, Daewoo, Fiat, Ford, Honda, Hyundai, Isuzu, Jeep, Kia, Lada, Lancia, Land Rover, LDV, Mazda, Mercedes, MG, Mitsubishi, Nissan, Peugeot, Renault, Rover, Saab, Ssangyong, Suzuki, Toyota, VAG, Vauxhall, Volvo.
- Injector Adaptor: M20, M22, M24 & Ford Stanadyne injectors plus clamp-on injectors.
- N.W./ G.W.: 4.8 kgs / 5 kgs
- Package Size: 440x440x345 mm
- QTY/CTN: 5 PCS
- MOQ: 10 PCS

TRHS-A1020B

TU-15 Cylinder Pressure Meter for Diesel Truck

- With all the adaptor for diesel engine in the world.
- N.W./ G.W.: 3.4 kgs / 3.8 kgs
- Package Size: 395x295x410 mm
- QTY/CTN: 5 PCS
- MOQ: 10 PCS

No.	Item	Length	Thread
1	Glow plug adaptor	91 mm	M10x1
2	Glow plug adaptor	119 mm	M10x1
3	Glow plug adaptor	135 mm	M10x1.25
4	Glow plug adaptor	118 mm	M22x1.5
5	Dial gauge	340 mm	/
6	Glow plug adaptor	113 mm	M10x1
7	Glow plug adaptor	102 mm	M8x1
8	Glow plug adaptor	83 mm	M10x1
9	Glow plug adaptor	67 mm	M10x1.25
10	Glow plug adaptor	51 mm	M12x1.25
11	Screw adaptor	160 mm	M18x1.5
12	Injector adaptor	88 mm	M24x1.5
13	Injector adaptor	75 mm	M22x1.5
14	Injector adaptor	63 mm	M24x2
15	Injector adaptor	75 mm	M20x1.5
16	H fitting	/	/
17	Bleed valve	/	/

TRHS-A1000

Unique Compression

- Easy-reading 2-1/2" diameter gauge, features colour-coded quadruple, calibrations with 0-300psi, 21kg/cm, 21bar & 2100kpa.
- 13" durable rubber hose with 14mm / 18mm adapter.
- 6" heavy-duty stem with universal rubber cone adapter fits all plug holes.
- N.W./ G.W.: 0.7 kgs / 0.75 kgs
- Package Size: 560x330x220 mm
- QTY/CTN:20 PCS
- MOQ: 20 PCS

TRHS-A1014

Automatic Wave-box Pressure Meter

- Easy to read dual scale gauge. Complete with 24"(600mm) of oil proof hose with 1/8" NPT.
- Also includes 1/4" NPT and 3/8"NPT adaptors.
- Dual gauge readings: 0 to 500psi (0 to 35 bar)
- Gauge diameter: 3"
- N.W./ G.W.: 1.3 kgs / 1.4 kgs
- Package Size: 470x360x340 mm
- QTY/CTN:10 PCS
- MOQ: 20 PCS

TRHS-A0032

Combination Electronic Stethoscope Kit (6 Channel)

- Super-sensitive stethoscope with rubber cone and test probe.
  Suitable for detection of faults in:
  Engine, Transmission.
  Cat Intake/Exhaust Manifold.
  Fuel Injectors, Radiators.
  Valves, Fuel Tanks.
- Kit includes audio probe, headphones, four clip-on microphones and four channel microphone selector boxes. Used by Noise, Harshness and Vibration engineers can isolate problem sources.
  Enables vehicle to be road-tested and diagnosed simultaneously.
- N.W./ G.W.: 3 kgs / 3.33 kgs
- Package Size: 430x330x410 mm
- QTY/CTN: 3 PCS
- MOQ:12 PCS

Engine Tools

PROFESSIONAL GRADE

TRHS-A1018

Tu-20-1 Cylinder Compression Pressure Tester

- 2.5"gauge with dual scale,reading from 0-300psi Ressure relief valve allows repeated on-vehicle test
- N.W./ G.W.: 0.97 kgs / 1.03 kgs
- Package Size: 470x315x435 mm
- QTY/CTN: 16 PCS
- MOQ: 16 PCS

TRHS-A0021

TU-21 Cylinder Leak Detector

- Tester checks the amount of leakage in an engine cylinder & helps determinethe source.
- Best used when comparing a suspect cylinder to a known good cylinder on same engine.
- Ideal for testing trucks & late model cars where clearance is minimal.
- Equipped with 2-1/2" input pressure gauge for proper leakage test setup and accurate results.
- N.W./ G.W.: 2 kgs / 2.3 kgs
- Package Size: 395x295x410 mm
- QTY/CTN: 5 PCS
- MOQ: 10 PCS

TRHS-A1021

Diesel Engine Compression Tester Set

- Measures cylinder pressure on diesel equipped cars and trucks.
- Supplied with one gauge and all necessary adapters 24.
- Gauges includes release valve and 368mm (14.5") of hose, dial reads from 0-1000 psi & 0-70 bar.
- Unique swivel and quick coupler allows the operator to connect the abapters quickly and easily.
- N.W./ G.W.: 4.8 kgs / 5 kgs
- Package Size: 440x440x345 mm
- QTY/CTN: 5 PCS
- MOQ: 10 PCS

TRHS-A0020

TU-114 Oil Combustion Spraying Pressure Meter

- 3"gauge with dual scale, reading from 0-150psi (0-10bar)
- N.W./ G.W.: 2 kgs / 2.2 kgs
- Package Size: 395x295x410 mm
- QTY/CTN: 5 PCS
- MOQ: 10 PCS

TRHS-A0030

Compression Tester Kit

- Pressure gauge scale: 0<->300psi (in 10 psi increments) , 0<->2000 kpa (in 100kpa increments).
- Pressure gauge hose: 26" long×3/8" diameter, 500 psi working pressure with quick disconnect.
- Hose adapters:
  Long reach: 10-1/2" Long×M12×1.25/500 PSI working pressure;
  Standard reach: 10-1/2"Long×M14×1.25/500 PSI working pres-sure;
  Standard reach: 10-1/2"Long×M10×1.00/500 PSI working pressure.
- N.W./ G.W.: 1.5 kgs / 1.6 kgs
- Package Size: 530x340x315 mm
- QTY/CTN: 10 PCS
- MOQ: 10 PCS

TRHS-A0031

Compression Tester Kit

- Quickly and accurately check compression on petrol engines.
- Thread sizes: M18×1.5, M14×1.25, M10×1.0, M12×1.25
- N.W./ G.W.: 1.1 kgs / 1.2 kgs
- Package Size: 470x315x435 mm
- QTY/CTN: 16 PCS
- MOQ: 16 PCS

PROFESSIONAL GRADE

TRHS-A1011

TU-443 Multiple-function Oil Combustion Pressure Meter

- Comprehensive kit of adaptors and fittings for most fuel injection systems.
- 3-1/2" gauge with dual scale (psi and bar), reading from 0-140psi and 0-10bar.
- Hanging hook and protective bumper specially for gauge.
- Pressure release valve fitted with long drain hose allows safe recovery of pressure and fuel.
- N.W./ G.W.: 4 kgs / 4.3 kgs
- Package Size: 430x330x410 mm
- QTY/CTN: 3 PCS
- MOQ: 15 PCS

TRHS-A3414

Engine Compression Tester Set

- Adaptive Inside: 10×1, 12×1.25, 14×1.25, 18×1.5.
- M10×M18 Screw repair driver
- M14×M18 Screw repair driver
- N.W./ G.W.: 2 kgs / 2.2 kgs
- Package Size: 530x340x315 mm
- QTY/CTN: 5 PCS
- MOQ: 10 PCS

TRHS-A1017

TU-7 Pressure Manometer For Compressive Air Cylinder

- Works on most domestic and foreign engines.
- 12" flexible hose for easy reach.
- Fits 14mm and 18mm spark plug holes.
- 0-300 psi
- Side release valve.
- N.W./ G.W.: 0.8 kgs / 0.88 kgs
- Package Size: 470x315x435 mm
- QTY/CTN: 16 PCS
- MOQ: 16 PCS

TRHS-8717

With Slide hammer for DB CDI-engines & Meredes CDI engines OM 611 612 613etc

- N.W/G.W: 15.5/16.5 kgs
- QTY/CTN: 4 PCS
- PACKAGE: 390x340x260 mm

Contents

For removing stuck and the seized common-rail injectorswithout dismount the cylinder head
The sturdy construction will enable the swift removal of even the most severly seized in injector
Specification:
Total length:350mm
Contents:slide hammer1.75kgs
Adapter M17x1.0
Adapter:M27 x1.0 for Bosch injector nozzle
Adapter:Puller M12x1.75

- MOQ:12 PCS

TRHS-E1245

14 PCS Cup Type Oil Filter Wrench Set

- Cap type filter wrenches,made from 7 and 16 or 1/2"sg drive wrenches, gange steel, will withstand up to Supplied in carry-case. 85lb.ft of torgue
- Designed to grip like sockets, thereby minimising the possibility of crushing filters
- Electro-black oxide finish for rust protection.
- Adaptor allows use with 3/8" or 1/2" sg drive wrenches.Supplied in carry-case.
- Contents:
  65-14F 68-14F 65/67-14F 76-14F
  76-30F 73-14F 75/77-15F 93-15F
  90-15F 100-15F 74/76-15F
  80-15F 80-82-15F 93-36F
- Adaptor:3/8" sg Drive(M)x1/2" sg Drive(F)
- N.W./ G.W.: 3.25 kgs / 3.38 kgs
- Package Size: 525x340x440 mm
- QTY/CTN:10 PCS
- MOQ: 50 PCS

TRHS-E3504

Engine Timing Tools-VW & AUDI

- N.W./ G.W.: 5.1 kgs / 5.3 kgs
- Package Size: 385x330x300 mm
- QTY/CTN: 5 PCS
- MOQ: 10 PCS

Engine Tools

PROFESSIONAL GRADE

TRHS-8781

Diesel Injector Extractor Master Kit

- N.W/G.W:21/22 kgs
- QTY/CTN:1 PCS
- PACKAGE:635x400x110 mm

Contents

The items you ordered will be shipped out in 1-2 business day via FedEx when your payment is clear.
The arrival time is about 7 business days to United States usually.
3 different slide hammers 1.6 kg, 160 mm length 2.7 kg, 460 mm length 5.1 kg, 600 mm length
2 pulling claws with fork opening 13.7 x 18 mm, 105 mm length 12.7 x 19 mm, 130 mm length - 5 slotted
6-pt 1/2" sockets, 100 mm length sizes 25 - 27 - 28 - 29 - 30 mm injector extractor, sleeve design,
with shells outer diameter 35 mm internal diameter 29 mm M17 x 1.0 spindle
pulling adapter with external thread M27 x 1.0 (3pcs) and M25 x 1.0 - pulling adapter with
internal thread M27 x 1.0 (3pcs) - sliding hammer adapter for inner, outer and claw extractor

- MOQ:10 PCS

TRHS-1064

16Pcs Glow Plug Removal Set

- N.W/G.W: 18/19 kgs
- QTY/CTN:10 PCS
- PACKAGE:400x310x320 mm

Contents

This set includes
Ratchet T-Bar
Drill holding adaptor
Puller outer housing
Force screw
Force nut
Top connection removal tool star socket
Allen key
Dual-size high-tensile step drill M8 & M10
Pilot drill centring sleeves
Pilot drill 3.5mm
Tap:1/4", M8, M10
Puller adaptor mandrels

- MOQ: 10 PCS

TRHS-E2661

Drain Plug Thread Repair Set (96 PCS)

- A comprehensive thread repair set ideal for repairing sump, gearbox and differential drain plug threads.
- Used to tap the damaged thread slightly over size, then fit a new drain plug and washer supplied.
- Set is suitable for the most popular threads used on cars and light commercial vehicles.
- Supplied in carry-case.
- Tap Sizes: M13x1.25, M13x1.5, M15x1.5, M17x1.5, M20x1.5, M22x1.5mm
- N.W./ G.W.: 2.1 kgs / 2.2 kgs
- Package Size: 530X340X315 mm
- QTY/CTN: 10 PCS
- MOQ: 10 PCS

TRHS-A1211

TU-112 Fuel Injection Pressure Test Set - Test Port

- Comprehensive kit of adaptors and fittings for modern Schrader test-port fuel injection systems.
- Components fitted with quick coupling system and safety valve to prevent inadvertent discharge of fuel under pressres.
- High pressure, dual scale gauge reading 0-145psi and 0-1000kpa with hanging hook and protective bumper.
- Pressure release valve with drain hose for safe fuel recovery
- N.W./ G.W.: 2.8 kgs / 3 kgs
- Package Size: 530x420x225 mm
- QTY/CTN: 8 PCS
- MOQ: 16 PCS

Tyre Tools

TRHS-3416

31Pcs Wheel bearing removal tool kit

- N.W/G.W:12/13 kgs
- QTY/CTN: 1 PCS
- PACKAGE: 470x420x120 mm

Contents

Allows disassembly & assembly of the wheel hub & the wheel bearings Pressure plate
dia:50-55-59-63.3-66.6-70.3-71.5-73.1-73.4-74.8-77.5-81.5-83.4mm
Sleeves with diameters:76-86-91-102mm
3 extractor holts M12x1.5 & M14 x1.5

- MOQ:10 PCS

TRHS-A3306

27 PCS Radiator Pressure Tester Vacuum-Type Cooling System Kit

- 0 to 35 psi gauge range
- Adapters usable with most of domestic and imported cars
- Durable product design and unexcelled precision of tools
- Complete, all-in-one set allows quick and easy testing for leakage in radiator and prompt change of coolant
- 19 color coded radiator test caps
- N.W./ G.W.: 6 kgs / 6.33 kgs
- Package Size: 600x315x50 mm
- QTY/CTN:3 PCS
- MOQ:15 PCS

TRHS-A3310

Water Tank Leak Detector (14 PCS)

- Test cooling system for leaks.
- Includes hand pump, test head in a blowmold case.
- Suit for: Mitsubishi, Mazda, Subaru, Toyota, Honda, Ford GM, Chrysler, VW, Audi, Volvo, Saab, Mercedes Benz, BMW, Renault, Fiat, Alfa, Romeo, Infinti, Geo, Suzuki, Isuzu, Lexus, Opel, Peugeot, Jeep, Rover, Citrom, Truck.
- N.W./ G.W.: 4 kgs / 4.3 kgs
- Package Size: 400x330x410 mm
- QTY/CTN: 3 PCS
- MOQ: 12 PCS

TRHS-1051B

Product Description

- N.W/G.W:2.8/3.8 kgs
- QTY/CTN:20 PCS
- PACKAGE Size:320x310x90 mm

Contents

1.Refrigeration Tools of Manifold Gauge for Air Conditioning System for R134A R404A R22 R410A
Unique biphenotypic valve
The gasket seal adopts the most popular environmental protection material can live up to eight years the high pressure is 0~800psi,low pressure 0~500psi with 3pieces 1.5m long hose and 3000psi max explosion pressure pack with 2pcs stright coupler,1pcs multifunction bottle opener,1pcs valve tools,1bag oil seal ring

- MOQ:20 PCS

TRHS-C1051A

R134A A/C Manifold Gauge Set (60",adjustable)

- Inclosed the 1107adjustable coupler.
- R-134a sight glass manifold with three 60" color-coded hoses.
- With sight glasses.
- High pressure: 0~500psi
  0~35Kg/cm^2
- Low pressure: 0~120psi
  -1~8.5Kg/cm^2
- Vacuum: 0~30 in/Hg
- N.W./ G.W.: 1.75 kgs / 1.85 kgs
- Package Size: 635x315x460 mm
- QTY/CTN: 10 PCS
- MOQ: 10 PCS

TRHS-3408

Product Description

- N.W/G.W:4.3/5.3 kgs
- QTY/CTN:20 PCS
- PACKAGE Size:400x380x100 mm

Contents

EFI Model :
1. Find out the fuel return hose, disconnect it and plug it with suitable adaptor;
2. Find out the fuel inlet hose, disconnect it and connect it with the outlet hose of the cleaner with proper adaptor;
3. Connect the outlet and return hose of the fuel tank, and open the tank cover; if there is not return hose, please move the fuse of the fuel pump so that the pump will not work;
4. Charge the cleaning fluid into the tank of the cleaner;
5. Connect the air source power to the air port of the cleaner, adjust its pressure 40-50PSI;
6. Check all connect point to make sure there is not leakage;
7. Start the engine to clean the fuel system.

To the Throttle Style:
To the throttle style system, the way of connection is the same, just adjust the pressure of the air source 1-5PSI.
The way to identify the inlet and return hose:
1. Generally speaking, inlet hose is bigger, return hose is samaller;
2. There is always a filter connected in the inlet hose side, and a buffer in the return side;
3. There is arrow on the hose to show the fuel flow direction.

- MOQ:20 PCS

TRHS-1052

Product Description

- N.W/G.W:1.2/2.2 kgs
- QTY/CTN:20 PCS
- PACKAGE Size:300x300x300 mm

Contents

Features:
100% brand new and high quality.
A/C Manifold Gauge tester & 3 color-coded refrigeration charging hoses.
Red & blue Manifold Gauges, clear dials, vivid scales, equipped with sight glass, easy to read.
Designed for using on automotive/family air conditioning system.
Available for R134A, R12, R22 & R502 refrigerants.
High pressure valve contributes to secure connect fittings.
This manifold gauges tools set services for diagnosing and recharging any A/C systems.
A solid hook for hanging the gauges to save space.
Specification:
Material: Copper + Plastic
Total weight: about 1.15 kg
Hose length: about 90 cm
Components: Double table valve + Three Colored-hoses + Balance hook(as pictures shown)
Package Included:
1x Manifold Gauges Tools Set

- MOQ:20 PCS

Brake And Clutch Tool

PROFESSIONAL GRADE

TRHS-A1998

Hand-held vacuum pump

- Hand-held vacuum pump
- Attach many kinds of joint to fit most kinds of vehicles.
- The body has the switch to control two kinds of pressure conditions.
- Include the parts of brake bleeder.
- N.W./ G.W.: 1.15 kgs / 1.25 kgs
- Package Size: 470x360x340 mm
- QTY/CTN:10 PCS
- MOQ:10 PCS

TRHS-A1998A

Hand-held Vacuum Pump

- Attach many kinds of joints to fit most kinds of vehicles.
- The boby has the switch to control two kinds of pressure conditions.
- Contens: Vacuum pump ,Fluid Container, Transfer cap vacuum hoses; 2x580 mm, 2x80 mm,Assorted vacuum Hose fittings x5, Bleed Nipple Adaptors x3
- N.W./ G.W.: 1.5 kgs / 1.6 kgs
- Package Size: 470x370x335 mm
- QTY/CTN: 10 PCS
- MOQ: 10 PCS

TRHS-A1998B

Hand-held vacuum pump

- Hand-held vacuum pump
- Attach many kinds of joint to fit most kinds of vehicles.
- The body has the switch to control two kinds of pressure conditions.
- Include the parts of brake bleeder.
- Pressure range:
  positive pressure .0~60 psi (1~4inhg)
  negative pressure.0~-30 psi (0~-1inhg)
- N.W./ G.W.: 1.8 kgs / 2 kgs
- Package Size: 650x385x460 mm
- QTY/CTN:10 PCS
- MOQ: 10 PCS

TRHS-2049

Product Description

- N.W/G.W:9.3/9.4 kgs
- QTY/CTN:20 PCS
- PACKAGE Size:540x400x200 mm

Contents

For refilling radiators with coolant without introducing air pockets.
Complete with adaptors for most modern cars and instructions.
Adaptors expand by approximately 4mm.
Included
0 - 76 cm/HG vacuum gauge

- MOQ:20 PCS

TRHS-2050

Front Wheel BEARING LNSTALLATION REMOVAL TOOL SET

- N.W/G.W:1.8/2.8 kgs
- QTY/CTN:20 PCS
- PACKAGE Size:350x200x60 mm

Contents

For installing and removing the camshaft / variable camshaft to check and adjust the camshaft for timing
Application:Audi; A3 (03-10), Seat; Altea, Ibiza, Leon, Skoda; Fabia II (07-09), Octavia (04-09), Roomster (06-09), Superb (09-10), VW; Eos (06-09), Golf (03-09), Golf Plus (05-09), Jetta (06-09), Passat (05-09), Polo (02-08), Scirocco (09-10), Tiguan (07-09), Touran (03-09)
Engine: 1.4FSi (AXU, BKG, BLN) 1.4TFSi (BLG, BMY, BWK, CAVA, CAVB, CAVC,CAVD, CAVF, CAXA, CAXC, CDGA) 1.6FSi (BAG, BLF, BLP, BTS)
Unit Type: piece Package Weight: 1.5kg (3.31lb.)

- MOQ:20 PCS

TRHS-2051

Automotive Cooling System Vacuum Purge & Refill Kit Car Radiator Tools

- N.W/G.W:4.0/5.0 kgs
- QTY/CTN:20 PCS
- PACKAGE Size:390x310x100 mm

Contents

For refilling radiators with coolant without introducing air pockets.
Complete with adaptors for most modern cars and instructions.
Adaptors expand by approximately 4mm.

- MOQ:20 PCS

Brake And Clutch Tool

PROFESSIONAL GRADE

TRHS-E3501

Clutch Tool Set

- Necessary for pre-tensioning self adjusting clutches before removal installation
- Prevents plate distortion which may prevent the clutch from disengaging or cause dragging.
- Features a refitting tool, allowing the clutch adjuster to be wound back, and six alignment adaptors.
- Alignment adaptor sizes: Φ15/23mm, Φ15/28mm, Φ15/34mm, Φ21/23mm/ Φ20/23mm, Φ14&15/20mm
- Assembly flywheel threads: Φ6x1.00mm, Φ7x1.00mm, Φ8x1.25mm
- N.W./ G.W.: 5.1 kgs / 5.3 kgs
- Package Size: 385x330x300 mm
- QTY/CTN: 2 PCS
- MOQ: 10 PCS

TRHS-E3318A

Universal Caliper Wind Back Kit

- Winds back brake piston for replacingbrake pads.
- Applications: Audi, BMW, Ford, Honda, Jaguar, Mazda, Mercedes, Mitsubishi, Nissan, Saab Subaru, Toyota, VW.
- N.W./ G.W.: 1.9 kgs / 2 kgs
- Package Size: 470x370x335 mm
- QTY/CTN: 10 PCS
- MOQ: 10 PCS

TRHS-E3318B

Positive & Negative Caliper Wind Back Kit

- Master set of adaptors for a wide range of vehicle applications.
- Suitable for push back and wind-back brake pistons.
- Includes left and right handed thrust bolt assemblies.
- Left handed thrust bolt reguired for Ford, Citroen and Renault applications.
- Precision made adaptor plates with thrust bolt assembly and reaction plate.
- Updated adapter set suitable for a wide variety of UK Vehides.
- Applications: Alfa Romeo, Audi, BMW, Citroen, Fiat, Ford, GM, Honda, Jaguar, Mazda, Mercedes, Mitsubishi, Nissan, Opel, Peugeot, Renau lt, Rover, Saap, Seat, Skoda, VW, Volvo, Subaru , Toyota, Vauxhall.
- N.W./ G.W.: 2.1 kgs / 2.2 kgs
- Package Size: 470x370x335 mm
- QTY/CTN: 10 PCS
- MOQ: 10 PCS

TRHS-E1026

- A large 9.0 liter(2.35gallon)capacity pneumatic fluid extractor, can be used to extract many kinds of non-explosive liquids.
- Completely automatic using normal shop air.
- New safety design, when the tank is full of liquid, air inlet mechanism will be shut off automatically.
- One man, fast, clean and easy operating.
- None electric spark, safety for workshop.
- Max air consumption: 5.0 cfm.
- Descripton: Pneumatic fluid extractor(9 liters)
- Working psi: 70~170psi
- Pressure bar: (4.9~11.9)
- Capacity: 9.0 l
- Air inlet: 1/4"
- Tank Capacity: 2.0L
- Bottle Capacity: 1.0L
- N.W./G.W.: 1.3 kgs / 1.4 kgs
- Package Size: 300x150x250 mm
  QTY/CTN: 50 PCS
  MOQ: 50 PCS

TRHS-E1025

- Brake fluid bleeder works with your air compressor to quickly assist in your brake bleeding!
- Flush and refill the entire brake system by yourself with this brake fluid bleeder.
- Comes with:
- 34 oz Waster Brake Fluid Tank
- 24 oz New Fluid tank that inserts into your master cylinder with 4 different provided adapters
- Size(s) 25/32 in. to 1-7/32 in. diameter (21 To 30mm),
- 31/32 in. to 1-1/4 in. diameter (24 To 32mm),
- 1-3/32 in. to 1-15/32 in. (28 To 37mm),
- 1-1/4 in. to 1-19/32 in. (32 To 41mm)
- Air requirement: 90 to 120 PSI, Air inlet: 1/4"- 18 NP
- Bleeds hydraulic brakes quick and effectively
- N.W./G.W.: 1.6 kgs / 1.7 kgs
- Package Size: 280x130x220mm
- QTY/CTN: 50 PCS
- MOQ: 50 PCS

TRHS-E3243

Left-handed Brake Wind-back Tool

- Left-handed thrust bolt required for Ford, Citroen and Renault applications. Helps prevent damage to pistons and seals.
- Applications: Citroen, Ford, Renault
- N.W./ G.W.: 4.8 kgs / 5 kgs
- Package Size: 430x330x410 mm
- QTY/CTN: 10 PCS
- MOQ: 10 PCS

Suspension Steering Tools

PROFESSIONAL GRADE

TRHS-E4001

Ball.Joint.separator

- Ball joint service kit 4 wheel drive adaptors
- Brake anchor pin removal and installation,
- 4 WHEEL DRIVE ADAPTORS
- This tool kit is designed for use on all cars and Light
- trucks that have press-fit type ball joints Without the
- Need to remove the control arm from the vehicle.
- C-frame and forcing screw
- installation adaptor
- removal adaptor
- installation cups
- removal cups
- receiving tubes
- N.W./G.W.: 8.6 kgs / 8.7 kgs
- Package Size: 350x200x70 mm
- QTY/CTN: 50 PCS
- MOQ: 50 PCS

TRHS-E1107

Spring Pressure Regulator

- Drop forged CR-V steel jaws & leaded screws (370mm) both heat treated ensure you obtain professional job performance.
- The tool is designed for use in limited space under wheel arch.
- Jaws design is fitting to wrap coil claws for safely.
- Maximum jaw opening is 370 mm.
- N.W./ G.W.: 2 kgs / 2.06 kgs
- Package Size: 385x340x295 mm
- QTY/CTN: 15 PCS
- MOQ: 15 PCS

TRHS-E3431

Ball Joint Separator

- N.W./ G.W.: 1.1 kgs / 1.2 kgs
- Package Size: 390x240x430 mm
- QTY/CTN: 10 PCS
- MOQ: 10 PCS

Item	Jaws opening	Applicable
B1966	23 mm	Audi, BMW, Citroen, Ford, Mercedes, Opel, Peugect,Rover, Saab, Volvo, VW, Japanische, Pkw etc.
B1967	28 mm	Audi, A4, A6, A8, VW, Passat ab'97 etc and Mercedes W203 etc.
B19672	34 mm	VW LT form'98 etc and Mercedes.

TRHS-E3410

Interchangeable Spring Compressor Kit

- Approved by BGS german workers safety insurance.
- 850Kg Maximum jaw loading with 4x safety factor.
- Supplied with 2 pairs of drop forged yokes to suit springs from 80 mm to165 mm and 155 mm to 195 mm.
- Safety yokes carefully shaped to prevent coil spring from bowing.
- Wide availability of spare yokes.
- N.W./ G.W.: 16.8 kgs / 17 kgs
- Package Size: 430x225x410 mm
- QTY/CTN: 2 PCS
- MOQ: 10 PCS

TRHS-E3463

14 PCS Master Ball Joint Adapter Set

- Material carbon steel.
- Service a wider range of vehicles with your existing ball joint service kit.
- This master ball joint adapter set includes receiver tubes and adapters for most gm, ford, dodge two-wheel drive, four-wheel drive pick-ups, vans and suvs.
- Constructed of forged carbon steel and a black oxide finish for toughness and durability, this ball joint set is designed to handle worksite abuse.
- The ball joint adapter set comes in a sturdy storage case for organization and transport.
- N.W./ g.W.: 6 kgs / 6.2 kgs
- Package Size: 410x300x100 mm
- QTY/CTN:4 PCS
- MOQ: 12 PCS

TRHS-E4002

4 in .14wheel drive ball jointremovwer/installer.kit

This tool kit is designed for use on all cars and light trucks that have press-fit type ball joints without the need to remove the control arm from the vehicle.
C-frame and forcing screw
installation adaptor
removal adaptor
installation cups
removal cups
receiving tubes

- 3 Receiving Tubes In Sizes 2-1/4" X 3", 1-3/4" X 2-1/2", And 1-3/4" X 2"
- 1 Install Adaptor
- 1 Remover Adaptor
- 1 Center Plug O.D. 7/8"
- 1 Receiving Tube O.D. 2-1/2", I. D. 2-1/4" Length 3/4"
- Receiving Cap Adaptor O.D. 2-1/4", I. D. 2" Length 2"
- Remover Installer O.D. 1-7/16", I. 3/4" Length 1"
- Receiving Cup O.D. 2-1/2", I. D. 1-1/4" Length 1-1/2"
- Receiving Tube O.D. 2-3/4", I. D. 1-7/16" Length 2-1/4"
- Receiving Tube O.D. 3", I. D. 2-3/4" Length 2-1/4"
- Receiving Cup O.D. 2-1/4", I. D. 2" Length 2"
- Receiving Tube O.D. 2-1/2", I. D. 2-1/4" Length 2-3/4"
- Installing Cup O.D. 2", I. D. 1-3/4" Length 2-5/16"
- Receiving Cup O.D. 2-7/8", I. D. 2-5/8" Length 3-7/8"
- Receiving Cup O.D. 2-7/16", I. D. 2-3/16" Length 3-3/16"
- Install Cup O.D. 2", I. D. 1-3/4" Length 3
- N.W./G.W.: 33 kgs / 34 kgs
- Package Size: 530x270x410 mm
- QTY/CTN: 50 PCS
- MOQ: 50 PCS

PROFESSIONAL GRADE

TRHS-E3412

7 PCS Panel Beating Set

- Seven of the most common tools necessary for professional body work are included in this set: D1016, D1017, D1018, D1019, D1785, D1786 and D1789 apply.
- 4sets / 20 / 21 / 1.3'
- N.W./ G.W.: 7 kgs / 7.5 kgs
- Package Size: 400x355x350 mm
- QTY/CTN: 4 PCS
- MOQ: 12 PCS

TRHS-B1040

10 Piece Pneumatic Die Grind Kit

- One handed straight type die grinder with aluminium body and trigger with safety catch chuck accepts grinding points with Φ6mm shanks. Supplied with a selection of popular sized grinding points, two spanners and carry case.
- N.W./ G.W.: 1.1 kgs / 1.2 kgs
- Package Size: 290x240x430 mm
- QTY/CTN: 20 PCS
- MOQ: 20 PCS

TRHS-E1302

10 lbs Dent Puller Set

- N.W./ G.W.: 9 kgs / 9.5 kgs
- Package Size: 600x260x270 mm
- QTY/CTN: 2 PCS
- MOQ: 10 PCS

TRHS-1011

11Pcs Trim Removal Set

- N.W/G.W: 8/9 kgs
- QTY/CTN:10 PCS
- PACKAGE: 640x260x245 mm

Contents

Made of Nylon	Angled clip Panel remover
Includes:	Fork Tip flat clip panel remover
Wide-type Remover	Clip Panel remover
Pull-type Remover	Sharp tip flat clip panel remover
Handy Remover	Panel remover
Narrow type remover	Blunt Tip flat clip panel remover
Upholstery clip remover	

- MOQ:10 PCS

TRHS-E2668

18 PCS Alternator Freewheel Pulley Removal Set

- Permits easy removal of freewheel alternator pulley, either on or off the vehicle.
- Allows alternator shaft to be held while the pulley retainer is removed.
- Incorporates a complete range of combination TRX-Star*, spline and hex adaptors to fit most alternators.
- Supplied in carry-case.
- N.W./ G.W.: 1.9 kgs / 2 kgs
- Package Size: 400x310x320 mm
- QTY/CTN:10 PCS
- MOQ: 20 PCS

TRHS-E3450

Spring Compressor for Mercedes

- Mercedes: W116, W123, W124, W126, W129, W140, W170, W201, W202, W210.
- GM, Opel, Peugeot, Rover, Saab, Volvo, VW, Ford, issan, Mitsubishi, Mazda, Fiat, Hyundai, Lada, etc.
- Telescopic construction with 3-point safety interlock and automatic freewheel at end of stroke.
- Maximum compression range 325 mm.
- Minimum compression range 120 mm.
- N.W./ G.W.: 6 kgs / 6.3 kgs
- Package Size: 410x210x390 mm
- QTY/CTN: 2 PCS
- MOQ: 10 PCS

Auto Body Repair Tool

PROFESSIONAL GRADE

TRHS-E1243

Y706 Bearing Separator Assembly Kit

- Bearing separator inside.
- Pullout the bearing with the H-type beam bolts.
- N.W./ G.W.: 6 kgs / 6.25 kgs
- Package Size: 395x295x330 mm
- QTY/CTN: 4 PCS
- MOQ: 12 PCS

TRHS-E1143

- Bearing separator inside.
- Pullout the bearing with the H-type beam bolts.
- N.W./ G.W.: 5.1 kgs / 5.3 kgs
- Package Size: 385x330x300 mm
- QTY/CTN: 5 PCS
- MOQ: 10 PCS

TRHS-E1244

Y709 Multi-functional Puller Combination Set

- For agriculture machine, automotive, and industry use.
- Packing: carrying case.
- N.W.: 16.8 kgs
- G.W.: 17 kgs
- Package Size: 430x225x410 mm
- QTY/CTN: 2 PCS
- MOQ: 10 PCS

TRHS-A1146

- Multi-purpose puller set for removal of balancers, vibration dampers, pulleys, gears and flywheels.
- Drop forged four slot yoke with a variety of hex bolts and forcing screw tips provides a complete universal set.
- Contents:Yoke,5" Thrust Bolt,Centring Adaptors; Sma ll, Large, Flat, Bolts; 3/8"x24x1-1/2"x3PC, 3/8"x16x2"x3PC, 3/8"x16x3x3PC, 3/8"x16x4-1/2"x2PC, 5/16"x12x6"x2PC, 5/16"x18x3-1/2"x3PC, 5/16"x24x3"x2PC, 1/4"x28x2-1/2"x2PC, M10X1.25x35mmx3PCS, M8x1.25x45mmx3PCS, M8x1.25x65mmx2PCS M8x1.5x90mmx2PCS Washers:5/1" IPx3PCS, 1/4" IDx2PCS, 10mmIDx3PCS, 8mmIDx3PC
- N.W./ G.W.: 1.05 kgs / 1.1 kgs
- Package Size: 370x280x270 mm
- QTY/CTN:10 PCS
- MOQ: 20 PCS

46 PCS Director Puller

TRHS-E0026

Inner Bearing Puller

- One slide hammer assemble & 4 clamp. Attachments for 3/8" to 1/2" (10-14 mm) 9/16" to 11/16" (15-19 mm), 5/8" (18-25 mm) &1" to 1-1/4" (25-32 mm).
- I.D. Bearing pulling.
- Open clamps by turning handle clockwise to snug against the bearing for pulling out evenly without damage the parts.
- N.W./ G.W.: 4.4 kgs / 4.6 kgs
- Package Size: 440x440x345 mm
- QTY/CTN: 5 PCS
- MOQ: 10 PCS

Timing Locking Set

TRHS-E3504

Engine Timing Tools-VW & AUDI

- N.W./ G.W.: 5.1 kgs / 5.3 kgs
- Package Size: 385x330x300 mm
- QTY/CTN: 5 PCS
- MOQ: 10 PCS

Engine Testing

TRHS-A3453

Engine Oil Pressure Tester

- Fault diagnostic kit for most vehicles
- With an Oil Pressure Warning light and switch. The kit enables testing of the switch, sensors, dashboard gauge and indicators linked to the oil pump.
- Permanently primed, oil filled hose with quick release couplings.
- 0-120psi (0-8Bar)
- N.W./ G.W.: 1.3 kgs / 1.4 kgs
- Package Size: 470x315x360 mm
- QTY/CTN:10 PCS
- MOQ: 20 PCS

TRHS-E2663

88 PCS Thread Repair Set

- 3 Installation tools,3 Break pin tools, 3 Twist drills,1hex key,3taps,75wire thread inserts,
- M5x0.8x6.7mm
- M6x1.0x10.8mm
- M8x1.25x10.8mm
- N.W./ G.W.: 0.95 kgs / 1 kgs
- Package Size: 480x350x235 mm
- QTY/CTN:20 PCS
- MOQ: 20 PCS

TRHS-E2667

13 PCS Alternator Pulley Kit

- Suitable for Audi, BMW, Fiat, Ford, Mercedes, Renault, Seat, VW and Porsche.
- Size: T40, T50, M8, M10, H8, H10
- 1/2" Drivex10mm, adapter.
- N.W./ G.W.: 1 kgs / 1.1 kgs
- Package Size: 540x250x180 mm
- QTY/CTN:10 PCS
- MOQ: 10 PCS

TRHS-3357

13pcs Universal Puller Set

- N.W/G.W: 16.5/17.5 kgs
- QTY/CTN: 2 PCS
- PACKAGE: 540x370x200 mm

Contents

2-leg sliding bar
3-leg Sliding bar
Arms 100mm (3pcs)
Arms 200mm (3pcs)
Arms 250mm (3pcs)
Fine threat spindle 160mm
Fine threat spindle 270mm

- MOQ:10 PCS

TRHS-4029

Hose Clamp pliers set

- N.W/G.W:16/17 kgs
- QTY/CTN:5 PCS
- PACKAGE:490x470x320 mm

Contents

1pc hose clamp pliers
1pc swivel jaw band clip pliers
1pc swivel jack spring wire clip pliers
1pc flat band hose clamp pliers
1pcs angled flat band hose clamp pliers
1pc hose remover pliers
1pcs clicle-R collar Pliers
1pc screwdriver
1pc hose remover

- MOQ:10 PCS

TRHS-E1301

Universal Axle Slide Hammer Set

- N.W./ G.W.: 10.5 kgs / 11 kgs
- Package Size: 600x260x250 mm
- QTY/CTN:2 PCS
- MOQ: 10 PCS
- 2.5kg slide hammer with 570mm shaft
- Use eight ways:external three jaw puller, internal three jaw puller,external two jaw puller, internal two jaw puller , grip wrench adaptor,lip puller, hub puller,dent puller.

puller type:Twin Leg
Internal Capacity:Φ35-110mm
Reach:82mm
External Capacity:Φ50-140mm
Reach:75mm
Puller Type:Triple Leg
Internal Capacity :Φ50-135mm
Reach:82mm
External Capacity:Φ20-135mm
Reach:75mm

ATV/Motorcycle Jack

Model:	T66751-CE(T64001G)	T66751(T66801G)
Capacity:	400 kgs	680 kgs
Min.Height:	140 mm	140 mm
Max.Height:	430 mm	430 mm
N.W.:	36.2 kgs	35.7 kgs
G.W.:	37.9 kg s	37.8 kgs
Package Size:	920x440x155 mm	920x440x155 mm
QTY/20'CY:	450PCS	420 pcs

T66751-CE (T64001G) **400 Kgs**

T66751 (T66801G) **680 Kgs**

Model:	TH66801
Capacity:	680 kgs
Min.Height:	120 mm
Max.Height:	380mm
N.W.:	27.3 kgs
G.W.:	28.5 kgs
Package Size:	830x380x130 mm
QTY/20'CY:	538 pcs

TH66801
680 Kgs

Model:	TRE5154C-J
Capacity:	680 kgs
Min.Height:	120 mm
Max.Height:	400 mm
N.W.:	29 kgs
G.W.:	31 kgs
Package Size:	850x410x150 mm
QTY/20'CY:	50PCS

TRE5154C-J
680 Kgs

TRE02301
135 Kgs

Model:	TRE02301
Capacity:	135 kgs
Tabel size:	410x350 mm
Min.Height:	350 mm
Max.Height:	850 mm
N.W.:	27 kgs
G.W.:	28 kgs
Package Size:	500x450x360 mm
QTY/20'CY:	170 pcs

www.tongrunjacks.com

Motorcycle Lift

Model:	TRM01110
Capacity:	500 kgs
Lifting Height:	370 mm
N.W.:	50.0 kgs
G.W.:	110.0 kgs
Package Size:	950x950x1250 mm
QTY/20'CY:	2 PCS
MOQ:	100 PCS

NEW PRODUCT

TRM01110
500 Kgs

Model:	TRM01109
Capacity:	500 kgs
Stock:	470 mm
Lifting Height:	470 mm
N.W.:	48.0 kgs
G.W.:	53.0 kgs
Package Size:	1200x550x390 mm
QTY/20'CY:	1 PC
MOQ:	100 PCS

TRM01109
500 Kgs

NEW PRODUCT

Motorcycle Lifting Table

Model:	TRE64007
Capacity:	360 kgs
Tabel size:	2170x490 mm
Min.Height:	220 mm
Max.Height:	780 mm
N.W.:	97.5 kgs
G.W.:	123.5 kgs
Package Size:	1510x670x260 mm
QTY/20'CY:	92 PCS

TRE64007
360 Kgs

CE

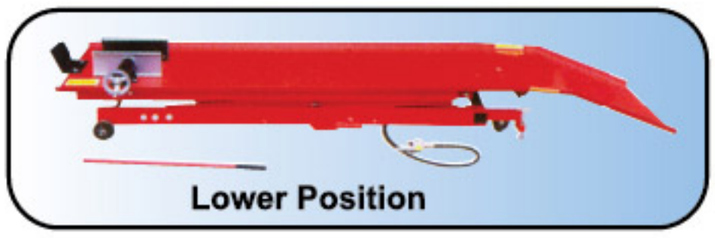

Foot Pump

Electric Hydraulic Motorcycle Lift

CE

NEW PRODUCT

TM03001

300 Kgs

Model	TM03001
Table Size	600(W) x 1800(L) mm
Min Height	170 mm
Max Lift Height	900 mm
Lifting Capability	300 kg
Motor Power	0.55 KW(0.75 HP)
Voltage	1ph,230 V,50 Hz
Pump Speed	2800 rpm
Motor	Electrohydraulic tyre
Operation Method	Cable remote control
Package Size	1830x630x315 mm
N.W.	96 kgs
G.W.	120 kgs
QTY/20'CY	63 PCS

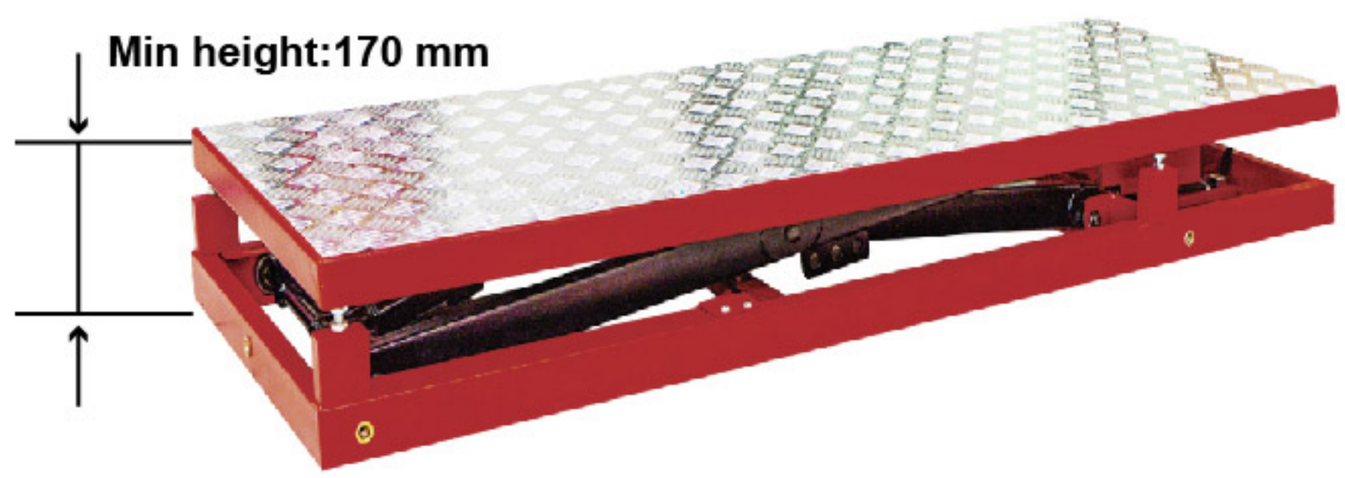

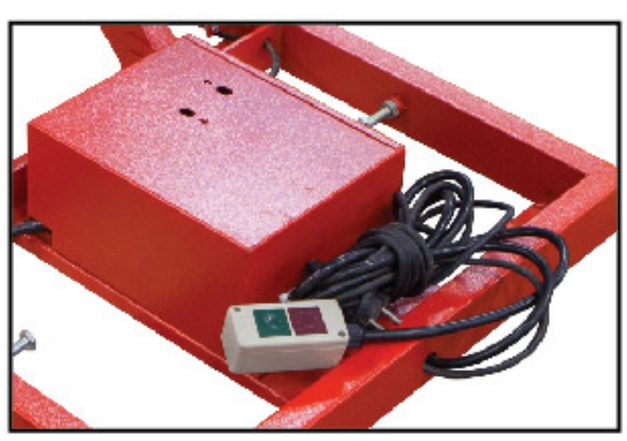

Remoter control

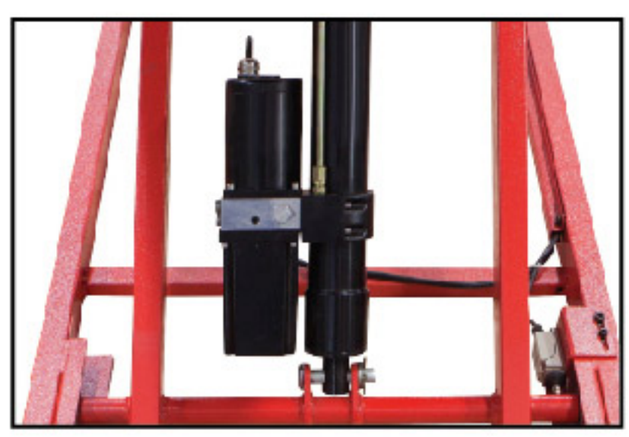

Hydraulic power pack

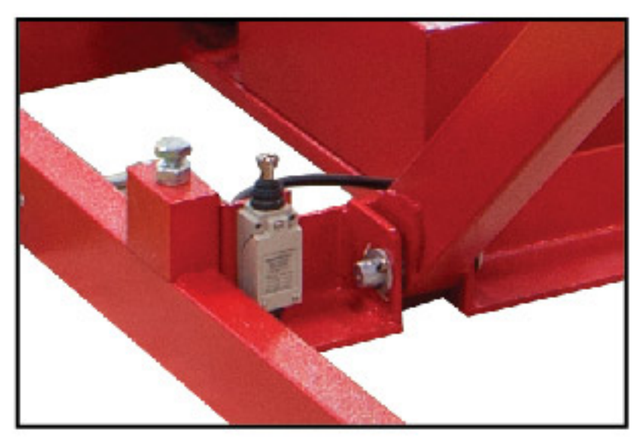

Limited switch down

Motorcycle Lifting Table

Model:	TRE64001
Capacity:	400 kgs
Table Size:	2540x685 mm
Min.Height:	180 mm
Max.Height:	760mm
N.W.:	122 kgs
G.W.:	157 kgs
Package Size:	2280x770x300 mm
QTY/20'CY:	45 PCS

TRE64001
400 Kgs

CE

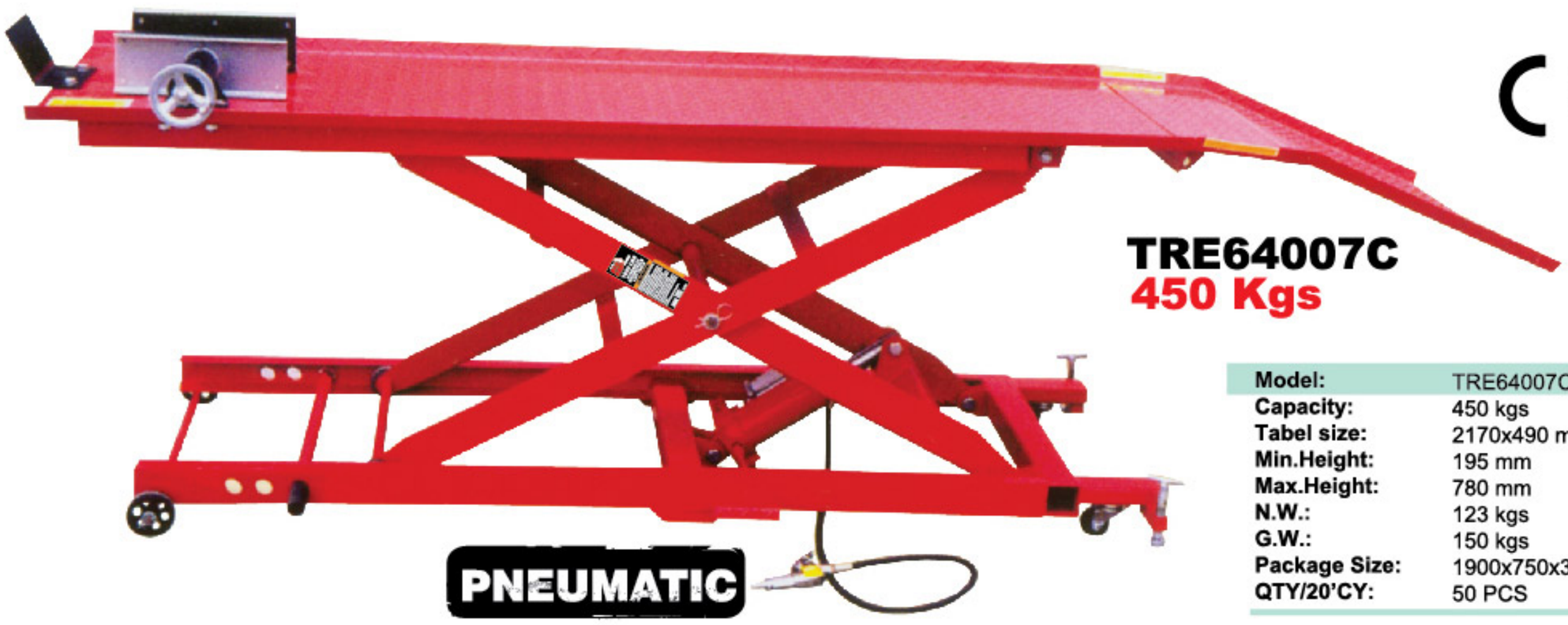

CE

TRE64007C
450 Kgs

Model:	TRE64007C
Capacity:	450 kgs
Tabel size:	2170x490 mm
Min.Height:	195 mm
Max.Height:	780 mm
N.W.:	123 kgs
G.W.:	150 kgs
Package Size:	1900x750x390 mm
QTY/20'CY:	50 PCS

CE

TRE64502
450 Kgs

Model:	TRE64502
Capacity:	450 kgs
Table size:	2200x680 mm
Min.Height:	180 mm
Max.Height:	780 mm
N.W.:	141 kgs
G.W.:	179 kgs
Package Size:	2280x730x280 mm
QTY/20'CY:	56 PCS

Motorcycle Lifting Table

PNEUMATIC

TRE64501
450 Kgs

Model	TRE64501
Capacity:	450 kgs
Table size:	2460x1220 mm
Min.Height:	190 mm
Max.Height:	840 mm
N.W.:	220 kgs
G.W.:	250 kgs
Package Size:	2190x670x320 mm
QTY/20'CY:	48 PCS

TRE04152Q-J
680 Kgs

Model:	TRE04152Q-J
Capacity:	680 kgs
Table Size :	1950x1220 mm
Min.Height:	180 mm
Max.Height:	830 mm
N.W.:	222 kgs
G.W.:	252 kgs
Package Size:	2040x790x350 mm
QTY/20'CY:	52 PCS

Model	TRE04107
Capacity:	1000 kgs
Table size:	2000x600 mm
Min.Height:	190 mm
Max.Height:	930 mm
N.W.:	130 kgs
G.W.:	160 kgs
Package Size:	2050x650x300 mm
QTY/20'CY:	64 PCS

Electric Power Unit →

TRE04107
1000 Kgs

Motorcycle Lift

NEW PRODUCT

TRE01108
450 Kgs

Model:	TRE01108
Capacity:	450 kgs
Platform size:	680x360 mm
Min.Height:	110 mm
Max.Height:	400 mm
N.W.:	23 kgs
G.W.:	25 kgs
Package Size:	810x530x135 mm
QTY/20'CY:	450 PCS

Motorcycle Support Stand

Model	Capacity (kgs)	N.W. (kgs)	G.W. (kgs)	Package Size (mm)	QTY/CTN (PCS)	QTY/20'CY (PCS)
TRF45501	100	2.8	2.9	800x480x400	6	900
TRF45502	200	4.85	4.9	880x570x430	6	780
TRMT05014	200	4.8	5.2	620x480x80	1	1200
TRMT005	250	5	5.2	/	/	700
TRMT014	200	4.8	5.2	640x380x90	1	1300

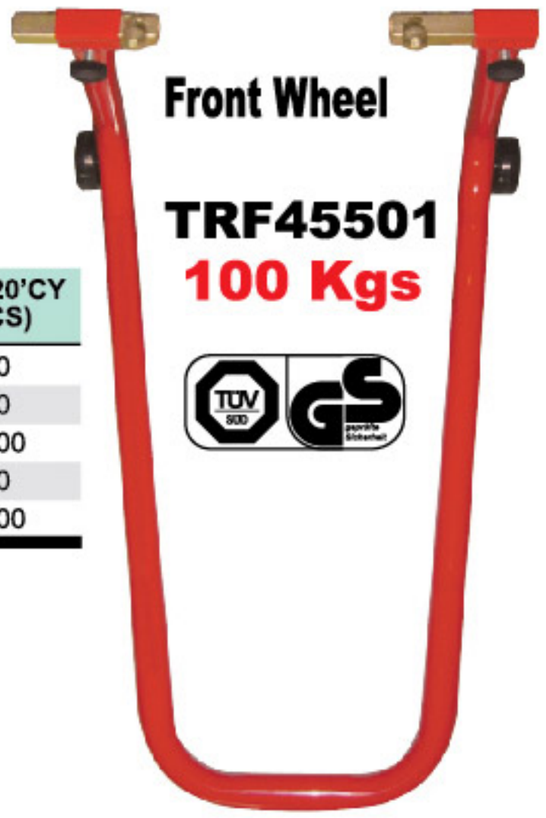

TRMT05014
200 Kgs

TRMT014
200 Kgs

Motorcycle Support Stand

TRMT03001
340 Kgs

Model:	TRMT03001
Capacity:	340
N.W.:	10
G.W.:	10.5
Package Size:	610x460x85
QTY/20'CY:	1400

Motorcycle Lifting Jack

Model:	TRE3001
Capacity:	500 kgs
Min.Height:	90 mm
Max.Height:	405 mm
N.W.	14 kgs
G.W.:	15 kgs
Package Size:	520x340x135 mm
QTY/20'CY:	1430 PCS

TRE3001
500 Kgs

Motorcycle Parking Stand

TRMT028
300 Kgs

TRMT060
300 Kgs

Model:	TRMT028	TRMT060
Capacity:	300 kgs	300 kgs
N.W.:	10.5 kgs	8.0
G.W.:	11.5 kgs	9.2
Package Size:	640x540x160 mm	560x530x125 mm
QTY/20'CY:	460 PCS	750 PCS
MOQ:	50 PCS	—

Motorcycle Dolly

TRMT2211
600 Kgs

Model:	TRE2211
Capacity:	600 kgs
Overall dimension:	2800x730x70 mm
Package Size:	1030x300x115 mm
N.W.:	47 kgs
G.W.:	49 kgs
QTY/20'CY:	430 PCS

ALL IN TORIN
unbelievable
POWER
TRD PRO
TORIN
BIG RED JACKS
50 TON HYDRAULIC SHOP PRESS
YELLOW JACKET
20 HYDRAULIC WELDED BOTTLE JACK

WE STAND BY OUR PRODUCT

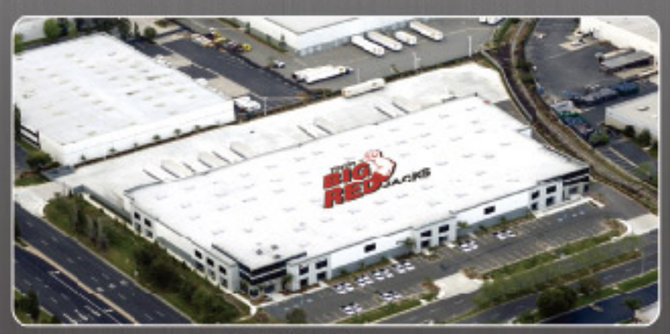

TORIN INC (LA)

TORIN INC (Detroit)

TORIN INC(France)

TORIN INC(Mexico)

TORIN INC(Hamburg)

TORIN INC(India)

TORIN INC(Thailand)

QUALITY APPROVAL AND CERTIFICATION

The quality of Tongrun's products has met the standars and the speculations of ASME of USA, BS of England, DIN of Germany, AS of Australia, JIS of Japan, and the speculations and standards of some other countries. Tongrun's products have also been certified with GS and CE issued by TUV of Germany.

ISO/TS 16949

ISO 14001:2004

ISO 9001

GS CERTIFICATE
CE CERTIFICATE

Automatic Welding Line

Trolley Jack

Bottle Jack

Scissor Jack

Jack Stand

Garage Jack

Enging Crane

Scan the QR code to get the manual & instruction video

Copyright are reserved to Changshu Tongrun Auto Accessory Co., Ltd any/or person cannot copy, unless agreed by its owner, or the owner will investigate the legal liability. We are not intend to infringe anybody's copyright, if so, please contact with us at once, we will correct it.

CHANGSHU TONGRUN AUTO ACCESSORY CO, LTD

New Long Teng Industry Area, Changshu Economy
Development Zone, Changshu, Jiangsu, China

Tel: (86-512)52343388 Fax: (86-512)52343399
Http:// www.tongrunjacks.com
E-mail: Admin@tongrun.com

@ Copyright by TONGRUN